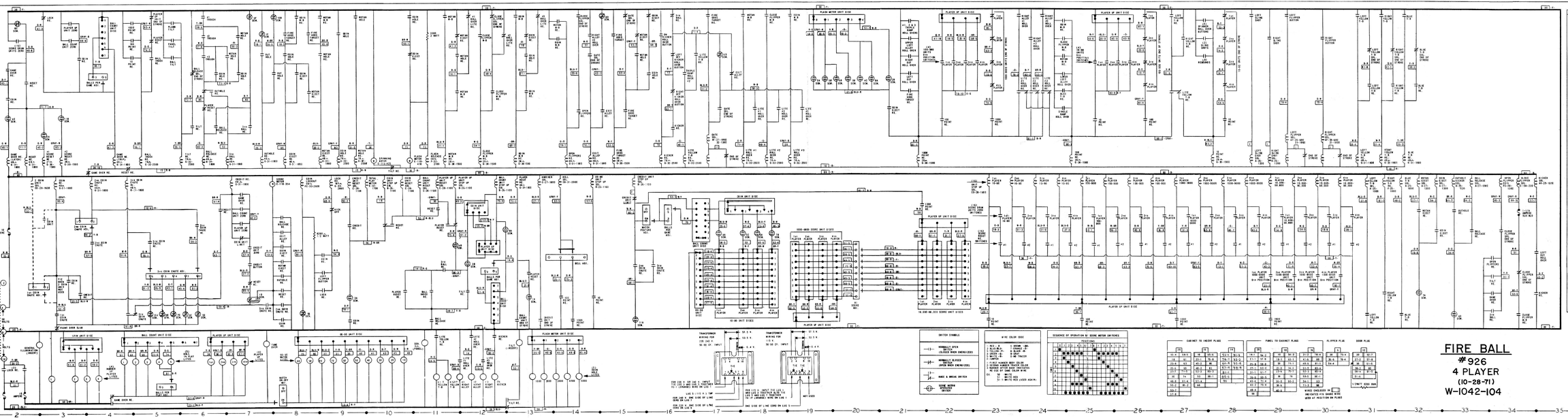

NAME OF COIL	COIL LOCATIONS	LOCATION
BALL COUNT UNIT ADVANCE		D-2
BALL COUNT UNIT STEP UP SOL.		D-2
BALL COUNT UNIT RESET		D-2
BALL COUNT UNIT RESET SOL.		D-2
BALL IN PLAY RLY.		D-2
BALL 1-2 RE.		D-2
CLOSE CL.TIPPER & MB RE.		F-12
CLOSE CL.TIPPER RE.		F-12
COIN LOCKOUT SOL.		F-4
COIN UNIT ADVANCE		D-1
COIN UNIT RESET SOL.		D-1
COIN UNIT STEP UP SOL.		D-1
CREDIT UNIT ADVANCE		D-1
CREDIT UNIT STEP UP SOL.		D-1
DIS. DOORS RE.		F-4
DIV.M.LAST RE.		F-4
FIRE HOOD TRANSIST RE.		F-4
GAME OVER RE.		F-4
GAME OVER RE. (LATCH)		F-4
GAME OVER RE. (SHIFT)		F-4
GI RELAY		D-2
GI RELAY RE.		D-2
HIGHER SOL.		F-4
LEFT LOWER SOL.		E-4
LEFT LOWER TO RE.		E-12
LEFT YELLOW TO RE.		E-12
LITE #1 BALL OVER RE.		E-12
LITE #2 BALL OVER RE.		E-12
LITE #3 BALL OVER RE.		E-12
LOWER SOL.		F-4
LOWER TO RE.		E-12
MAIN RELAY RE.		D-2
MAIN RELAY SOL.		D-2
MAIN RELAY SOL.		D-2
MAIN RELAY RE