Bally

January 1991
16-20001-101

Harley-Davidson

"Harley-Davidson Motor Company Official Licensed Product"

Operations Manual Includes
Operations & Adjustments
Testing & Problem Diagnosis
Parts Information
Reference Diagrams & Schematics

Midway Manufacturing Company

Harley-Davidson

HARLEY-DAVIDSON
"Live to Ride, Ride to Live"
RULES

3 Top Lanes 'U.S.A.' Bonus X
Making U-S-A (3 Top Lanes) scores 50K and advances the Bonus Multiplier 2x-3x-4x-5x-6x, and lights outlanes alternately for Extra Ball.

Spinner Lanes, Moving Bike and Jackpot
To light the Jackpot, get your 'Bike' from Los Angeles to Laconia, N.H.. Spinners and Jet Bumpers advance Jackpot. Right Return Lane lights Left Spinner Lane to move 'Bike' to next city. Left Return Lane lights Right Spinner Lane. Making the shot opens the gate and lights the Loop Shot for consecutive Millions. Reaching Laconia, N.H. Lights Right Eject for Jackpot. If Jackpot feature times out, you must complete the trip back to Los Angeles to light it again. Jackpot is multiplied each time it is collected, 2nd time = 2x, 3rd time = 3x, 4th time = 4x, etc..

Los Angeles - Salt Lake City - Sturgis, S.D.- Milwaukee - Chicago -
Talladega, Al.- Daytona -York, P.A. - New York City - Laconia, N.H.

3 Banks H-A-R-L-E-Y
Left 3 Bank Drop Target Lights Left Spinner for 3000 points. Right 3 Bank Drop Target lights Right Spinner for 3000 points. Making both 3 Bank Drop Targets, H-A-R- and L-E-Y scores and advances the Harley Value. No Light, 25K - 50K - 100K - 200K - 300K - 500K. Each consecutive 'Harley' scores 500K until light times out.

D-A-V-I-D-S-O-N
Making the Lower Left 'D' Target , the Top Left 'A' Target, the Top Right 'V' Target, and the Right 5 Bank Bullseye I-D-S-O-N lights the Top Right Eject for 'Speed Bonus'. The 'Speed Bonus' starts at 1 Million and rapidly decreases to 0. The second time the 'Speed Bonus' is achieved it starts at 2 Million, the third time 3 Million, etc.. Making D-A-V-I-D-S-O-N a second time also lights the Top Right Eject for an Extra Ball.

4 Lower Lanes 'B-I-K-E'
Making the 4 Lower Lanes (Lane Change) advances the Bike to the next city, scores and advances the 'Bike' Value. 250K - 500K - 750K - 1 Million.

Right Side Eject 'Speed Trap'
Right Side Eject (Speed Trap) scores Mystery Value. The Mystery Value could be Points, Extra Ball, Advance Next City, Speeding Ticket (take away minimal score), Warning (zilch), Score 'Harley Bonus', 'Light Speed Bonus', Quick Multi-ball™ , or Bonus Multiplier.

Multi-ball™ and Ejects
Left Top Eject scores and advances the Eject Value, 25K- 50K- 100K- 150K and Lock. Locking a ball in the Left Eject lights the Right Eject for 150K and Lock. Locking both balls starts Multi-ball™ . During Multi-ball™ spelling 'Harley-Davidson' scores 5 million points and lights 'Screamin' Eagle' (Loop Shots) for unlimited Millions until the end of Multi-ball™ .

'Rest Stop' Bonus
Ejects which have no feature lit will score and advance the 'Rest Stop' Bonus.

Bonus Collect
Outhole Bonus is the Bonus Value multiplied by the Bonus Multiplier and 50K for each city you have visited.

Contents

Playfield Shots 1

Section 1 - Game Operation & Test Information

(System WPC) ROM Summary 1-1
Connector & Component Identification 1-2
Circuit Boards. 1-2
Figure 1. Locations Diagram- Game Circuit Boards and Major Mechanisms. . . . 1-3
Game Control Locations 1-4
Figure 2. Pinball Game Control Locations 1-4
Pinball Game Assembly Instructions 1-5
Figure 3. Pinball Assembly, Playfield Pitch Angle, and Leg Levelers Detail . . . 1-5
Game Operation. 1-7
Menu System Operation 1-9
Main Menu 1-9
Adjustment Menu 1-10
Standard Adjustments Menu. 1-10
Feature Adjustments. 1-14
Pricing Adjustments. 1-17
Pricing Table. 1-20
H.S.T.D. Adjustments. 1-21
Printer Adjustments 1-22
Bookkeeping Menu 1-23
Main Audits 1-23
Earnings Audits 1-24
Standard Audits. 1-24
Feature Audits 1-25
Histograms 1-26
Time-Stamps 1-27
Printouts Menu 1-28
Test Menu. 1-29
Switch Edges and Switch Levels Test 1-29
Single Switch Test and Switch Matrix Table. 1-30
Solenoid Test 1-31
Flasher Test 1-31
Solenoid Table 1-32
General Illumination Test 1-33
Sound and Music Test 1-33
Single Lamp, All Lamp, and Flasher and Lamp Test. 1-34
Lamp Matrix. 1-35
Display Test 1-36
Utilities Menu 1-35
Clear Audits, Clear Coins, Reset H.S.T.D., Set Time & Date
Custom Message, Set Game I.D., Factory Adjusts 1-37
Factory Reset 1-38
Presets 1-38
Game Difficulty Table for U.S./Canadian & French Games. 1-39
Game Difficulty Table for German/European Games 1-39
Preset U.S./Canadian Games 1-40
Preset German/European Games. 1-42
Preset French Games 1-43
Problem Analysis. 1-44
CPU Board Error Codes. 1-45
Maintenance Information 1-46
Fuse List 1-47

© Copyright 1990 Williams Electronics Games, Inc.

Contents

Section 2 - Game Parts Information

Locations Diagram - Game Circuit Boards and Major Mechanisms 2-2
Audio Board 2-3
CPU Board 2-4
Power Driver Board 2-6
Display Driver Board 2-8
Single Display Board 2-9
High Current Driver Board 2-10
Lamp Boards 2-11
Spin And Drop Targets 2-12
Ball Shooter Lane Feeder, Outhole Kicker 2-13
Right Flipper 2-14
Left Flipper 2-15
Thumper (jet) Bumpers 2-16
Kickers (Slingshots) 2-18
Trough, Knocker 2-19
Ball Ejects 2-20
Ball Gate Actuator 2-21
Shaker, Ball Shooter. 2-22
Coin Door Interface Board. 2-23
Coin Door. 2-24
3-Bank Drop Target 2-26
3-Bank Drop Target Opto Board 2-27
Posts 2-28
Backbox Parts List 2-29
Lamp Locations and Matrix. 2-30
Switch Locations and Matrix 2-32
Solenoid Locations and Table 2-34
Playfield Parts 2-36
Rubber Rings 2-38

Section 3 - Wiring Diagrams And Schematics

Flipper Wiring 3-2
Drop Target Opto Board Schematic 3-3
High Current Driver Schematic 3-4
Solenoid Wiring 3-5
Coin Door Interface Board Schematic 3-6
CPU Board Schematic 3-7
Display Driver Board Schematic 3-8
Audio Board Schematic 3-9
Power Driver Board Schematic. 3-11
Backbox Wiring 3-14
Power Wiring 3-15
Interboard Wiring 3-16

Harley-Davidson
U-S-A & Bonus 'X'

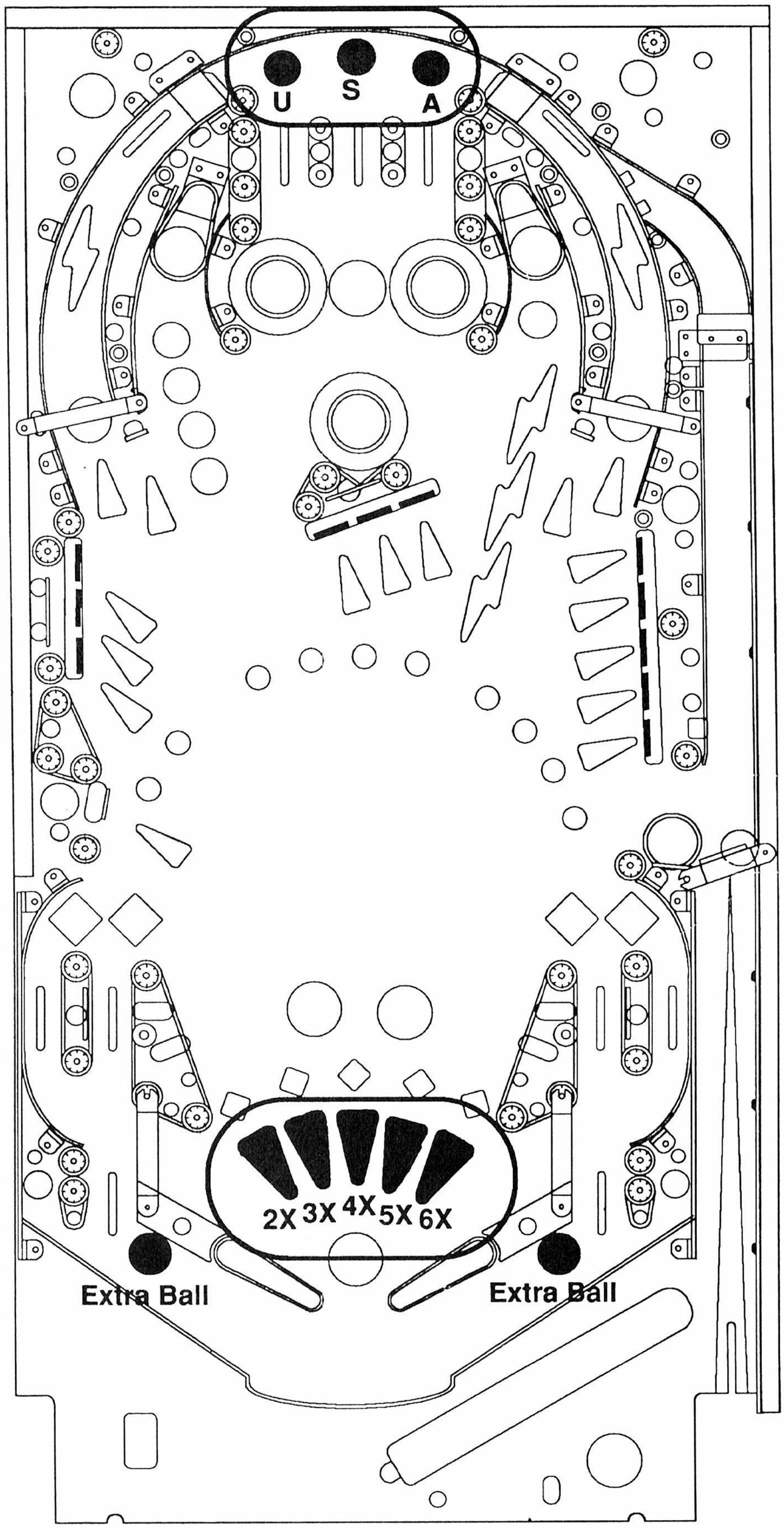

Making U-S-A scores 50K & Advances Bonus 'X' . After 6X, U-S-A Lights Outlanes alternately for Extra Ball.

Harley-Davidson
Cities (moving bike) & Jackpot

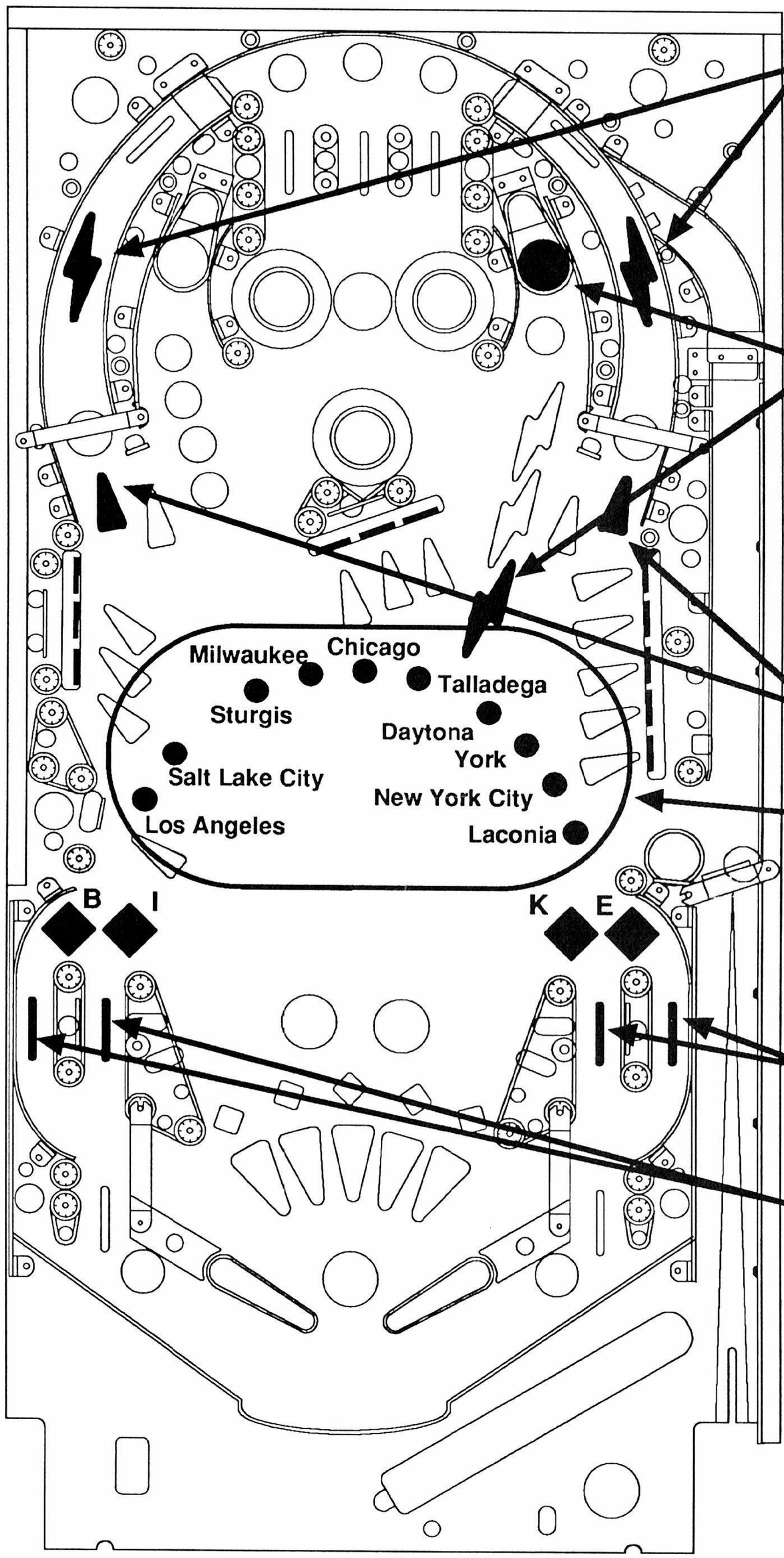

Million

Reaching Laconia lights the Right Eject for Jackpot. The return trip to Los Angeles lights the Right Eject for Jackpot x 2. Each Consecutive trip light the Jackpot for x3, x 4, etc. .

Jackpot

Lower Left Lanes light Right Spinner Lane to advance a city.

Lower Right Lanes light Left Spinner Lane to advance a city.

Advance City, then light Million.

Cities

Bike advances a city & scores Bike Bonus, 250K-500K-750K-1 Million.

Lower Right Lanes

Lower Left Lanes

Harley-Davidson
Harley 3-Bank

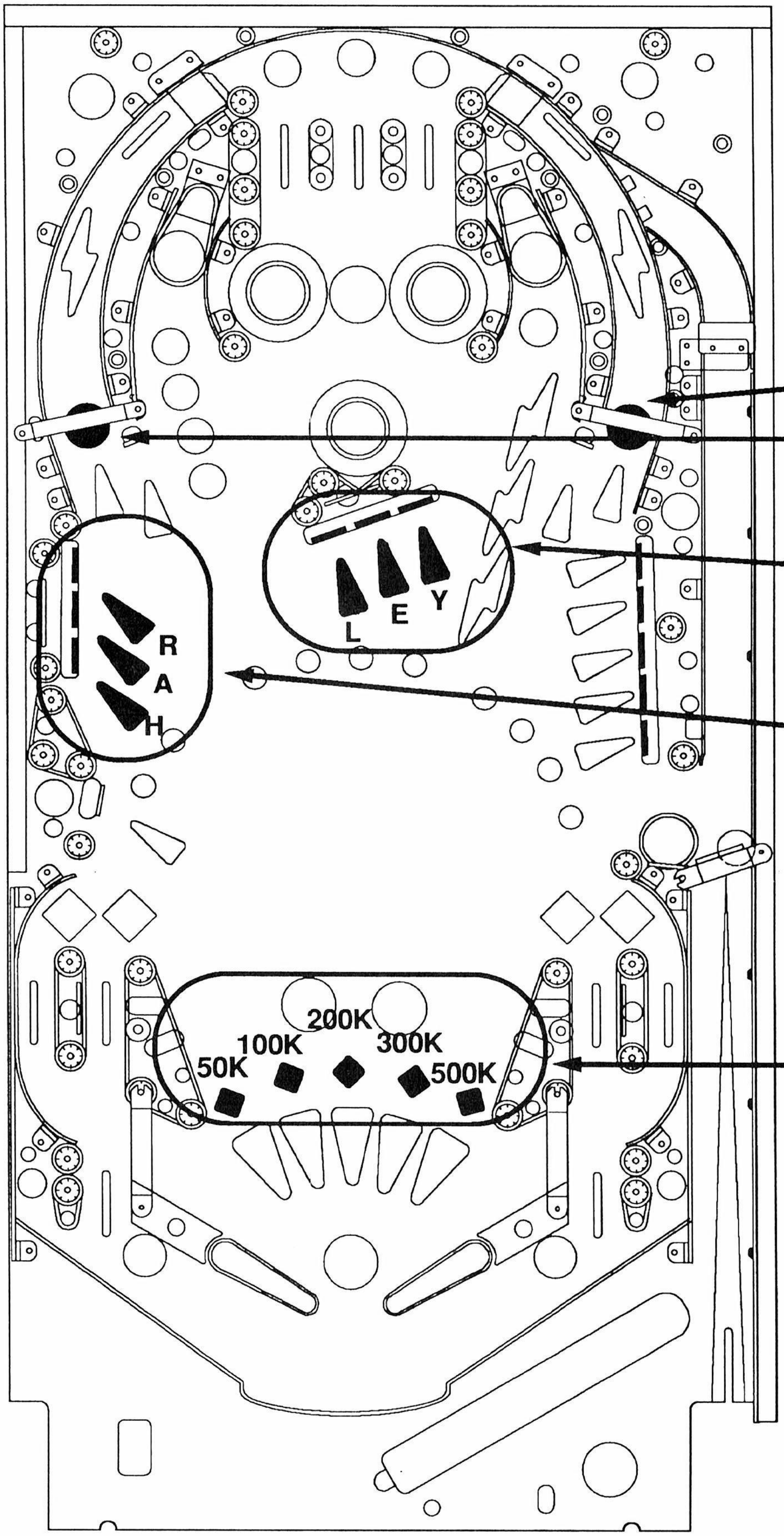

Harley-Davidson
D-A-V-I-D-S-O-N, Speed Bonus& Extra Ball

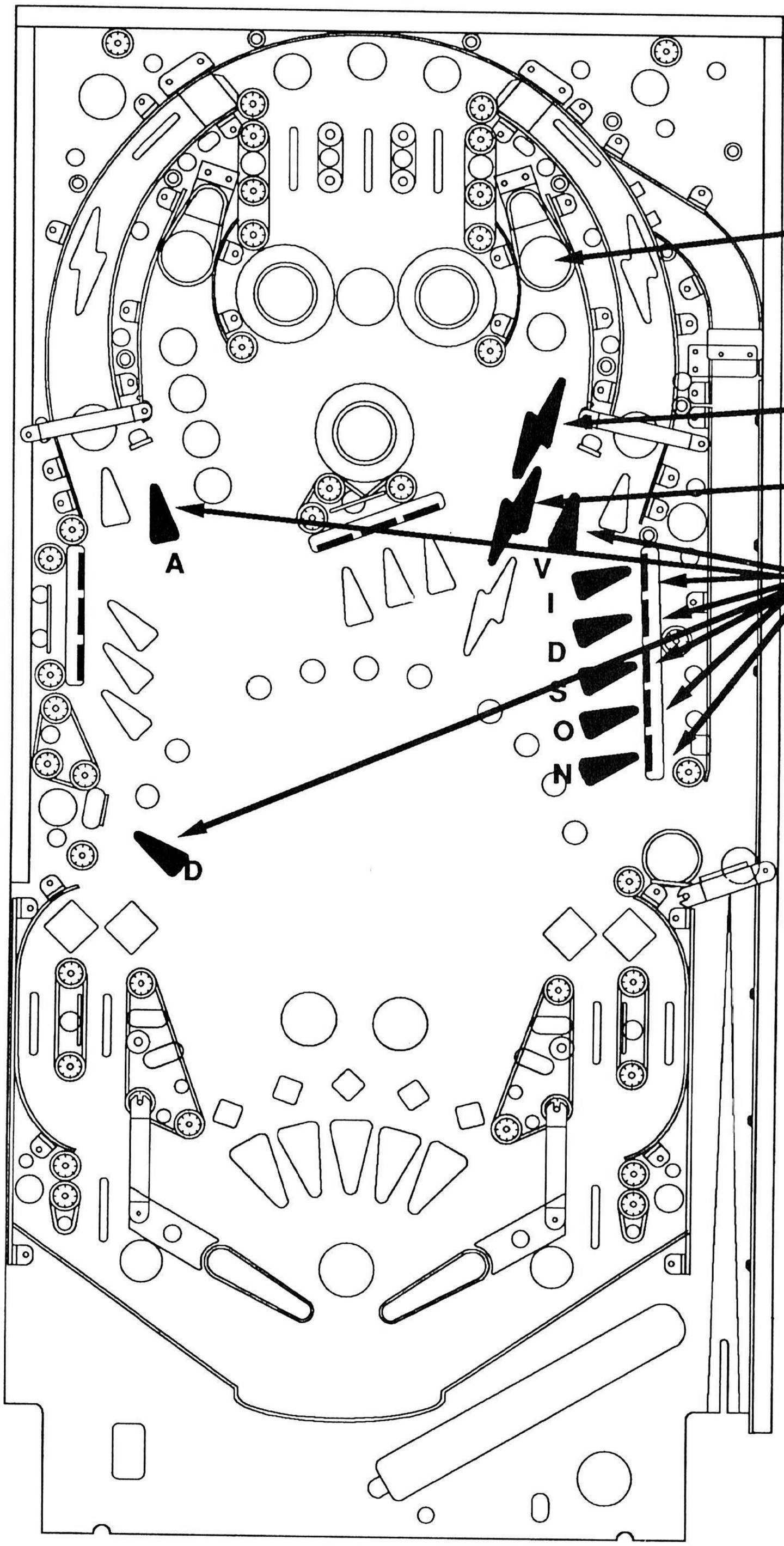

Top Right Eject

Speed Bonus

Extra Ball

Spelling DAVIDSON, lights the Top Right Eject for Speed Bonus. Speed Bonus starts at 1 Million and rapidly decreases to zero. Speed Bonus starts at 2 Million the 2nd time, 3 Million the 3rd time etc. .
Making DAVIDSON a 2nd time also lights the Top Right Eject for an Extra Ball.

Harley-Davidson
Speed Trap (Right Side Eject)

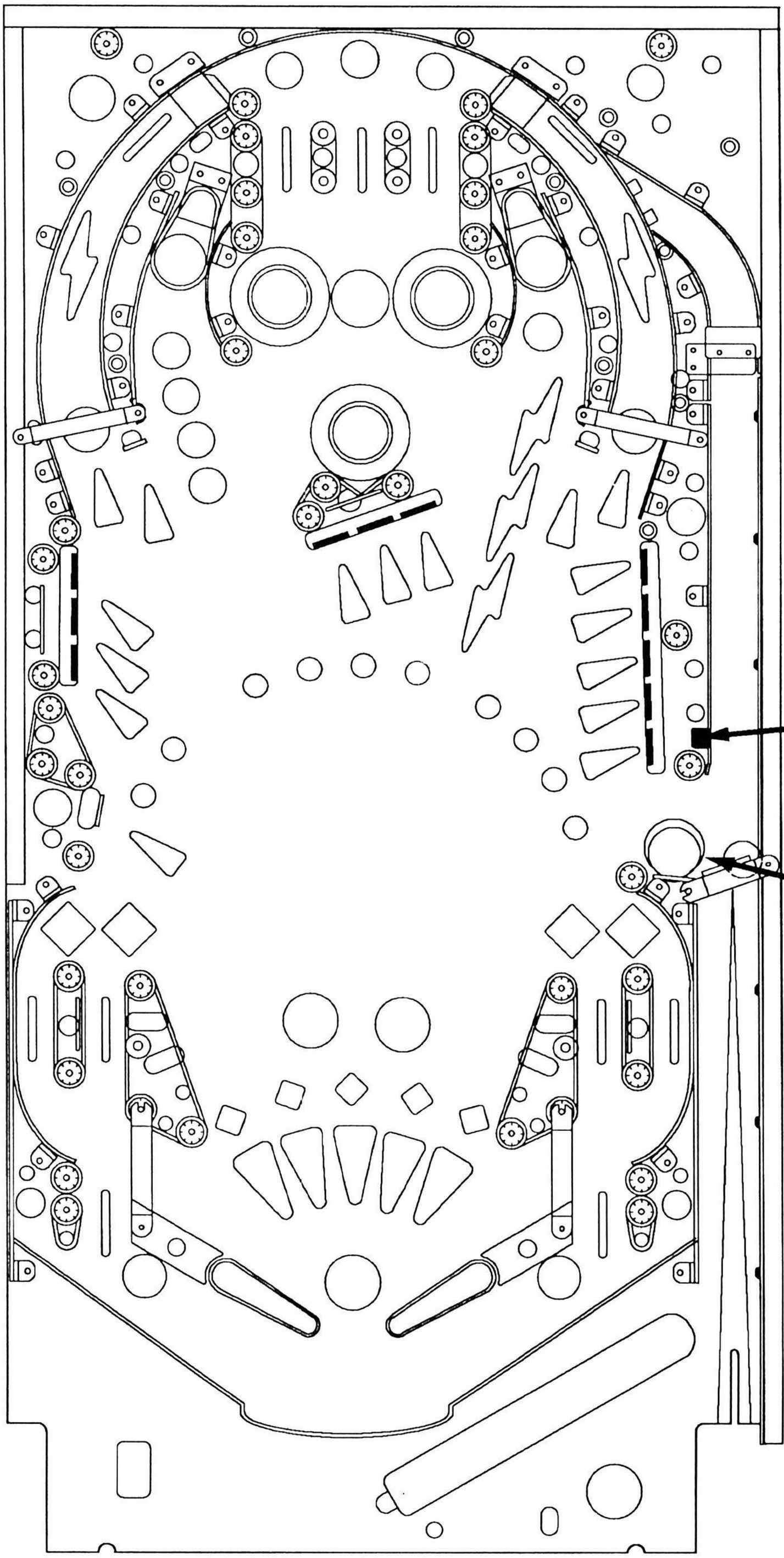

Right Side Eject (Speed Trap) when lit, scores Mystery Value: Points - Extra Ball - Advance City - Speeding Ticket (-10K) - Warning (zilch) - score Harley Bonus - light Speed Bonus - score Bike Bonus.

Harley-Davidson
Multi-Ball & Ejects

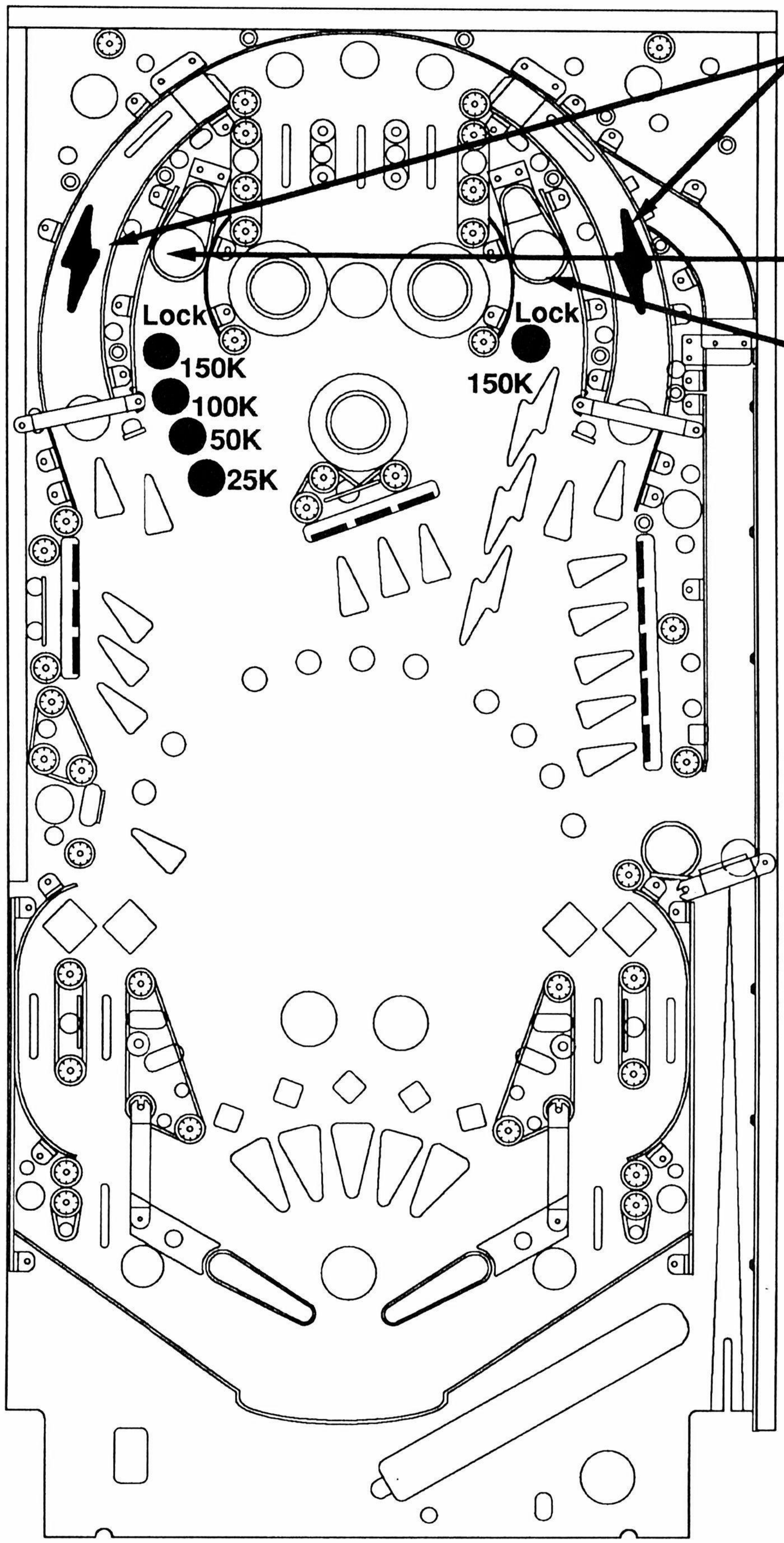

Left Top Eject scores & advances the Eject Value, 25K - 50K - 100K - 150K & Lock. Locking a ball in the Left Eject lights the Right Eject for 150K & Lock. After locking both balls Multi-ball starts with the next ball played, making it a 3 ball Multi-ball. During Multi-ball spelling HARLEY-DAVIDSON scores 5 Million & lights Loop Shots for unlimited Millions until the end of Multi-ball.

Section 1

Game Operation & Test Information

- **Harley-Davidson (System WPC) ROM Summary**
- **Pinball Game Assembly Instructions**
- **Game Play**
- **Menu System Operation**
  - **Adjustments**
  - **Audits**
  - **Test/Diagnostic Procedures**
  - **Utilities**

Harley-Davidson (System WPC) ROM Summary

IC	TYPE	LOCATION	BOARD	PART NUMBER
Game ROM 1	27010	U6	CPU	A-5343-20001-1
Music/Speech ROM 2	27010	U15	Audio	A-5343-20001-2
Music/Speech ROM 3	27010	U18	Audio	A-5343-20001-3

NOTICE

To order a replacement ROM from your authorized WILLIAMS ELECTRONICS GAMES distributor, specify: (1) part number (if available); (2) ROM label color; (3) ROM level (number) on the label; (4) which game the ROM is used in.

CONNECTOR & COMPONENT IDENTIFICATION

Since **Harley-Davidson** uses WILLIAMS ELECTRONICS GAMES' WPC Electronics System, a new technique to identify connectors and other game components must be introduced. Each plug or jack receives a number that identifies the circuit board and position on that board that it connects to. J-designations refer to the male part of a connector. P-designations refer to the female part of a connector. For example, J101 designates jack 1 of board 1 (a Power Driver Board Board jack); P306 designates plug 6 of board 3 (a Display Driver Board plug). Identifying the specific pin number of a connector involves a hyphen, which separates the pin number from the plug or jack designation. For example, J101-3 refers to pin 3 of jack 1 on board 1.

Other game components may also have similar numbers to clarify their locations or related circuit. For example, F501 refers to a fuse located on the Sound Board.

Prefix numbers for the WPC circuit boards are listed below.

1- Power Driver Board
2- CPU Board
3- Display Driver Board
4- Dual or Single Display Board
5- Sound Board

CIRCUIT BOARDS

WPC Circuit Boards for **Harley-Davidson** are in the backbox. They are accessible by unlocking the Backbox, removing the Backglass, unlatching the Insert Board, and swinging it open.

Lamp circuit boards are mounted under the Playfield.

CPU Board The WPC CPU Board, p/n A-12742-20001, must be equipped with the ROM specified in the ROM Summary.

Sound Board The Sound Board p/n A-12738-20001, must be equipped with the ROMs specified in the ROM Summary.

Power Driver Board The Power Driver Board is p/n A-12697.

Display Driver Board The Display Driver Board is p/n A-12739-1, -2, or -3. The dash number indicates whether an extended display is used, and if so, how many. No extended display = -1, one extended display = -2, two extended displays = -3. Harley-Davidson uses the A-12739-1 Display Driver Board.

Single Display Board The Single Display Board is p/n A-12794.

Figure 1 shows the locations of these circuit boards, as well as other devices especially located to make **Harley-Davidson** a great game.

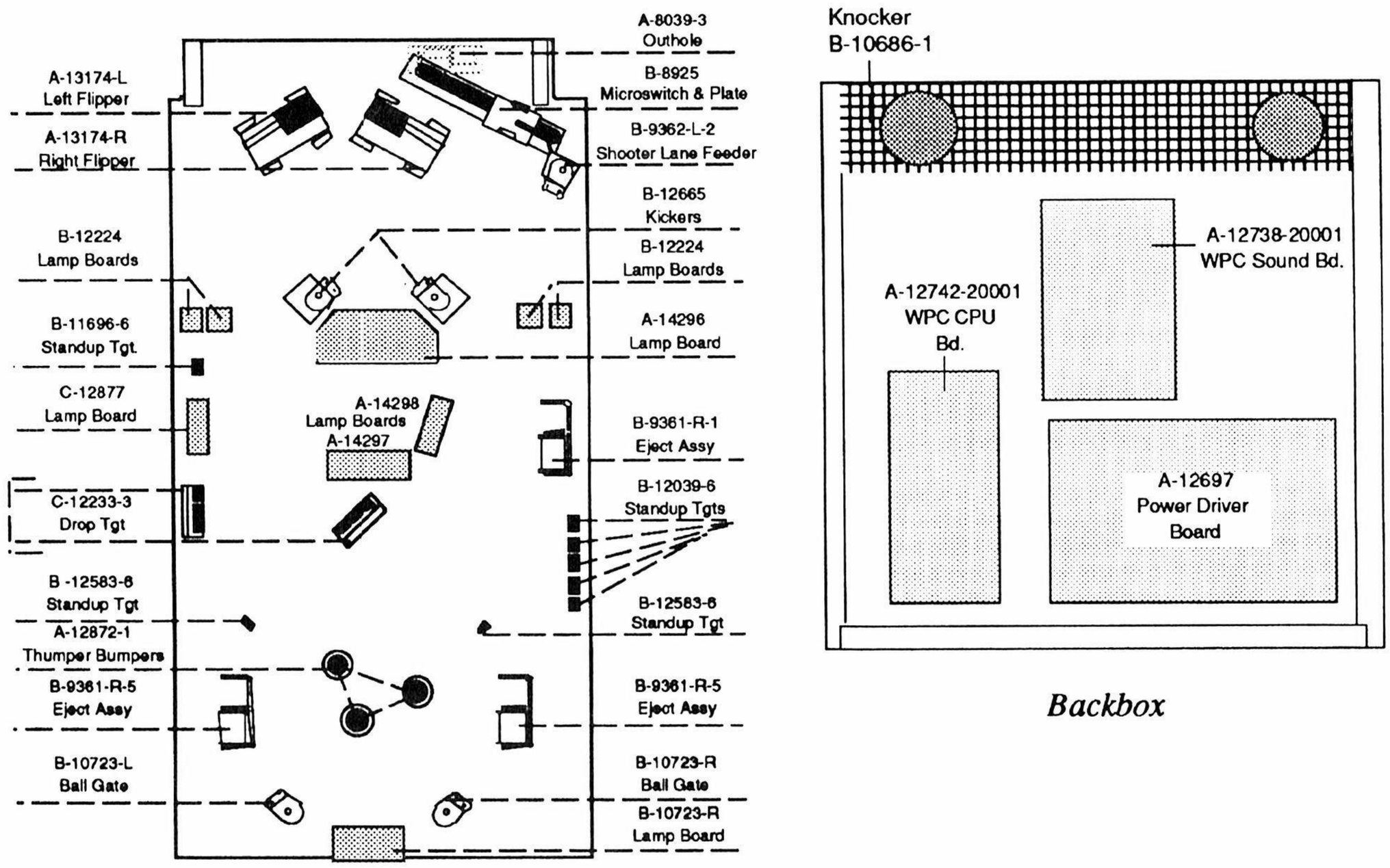

Figure 1. Locations Diagram - Game Circuit Boards and Major Mechanisms

GAME CONTROL LOCATIONS

Cabinet Switches
The On-Off switch is on the bottom of the cabinet near the right front leg.
The Start Button is a pushbutton to the left of the coin door on the cabinet exterior. Press the Start button to begin a game, or during the diagnostic mode, to ask for HELP.

Coin Door Switches
The operator controls all game adjustments, obtains bookkeeping information, and diagnoses problems, using only four pushbutton switches mounted on the inside of the coin door. The Coin Door Switches have two modes of operation Normal Function and Test Function.

Normal Function

The Service Credits switch puts credits on the game that are not included in the game audits.
The Volume Up switch raises the sound level of the game. Press and hold the button until the desired level is reached.
The Volume Down switch lowers the sound level of the game. Press and hold the button until the desired level is reached. See Adjustment A.1 28 to shut sound Off completely.
The Begin Test switch starts the Menu System Operation and changes the Coin Door Switches from Normal Function to Test Function.

Test Function

The Escape switch allows you to get out of a menu selection or return to the Attract Mode.
The Up switch allows you to cycle forward through the menu selections or adjustment choices.
The Down switch allows you to cycle backward through the menu selections or adjustment choices.
The Enter switch allows you to get into a menu selection or lock in an adjustment choice.

Coin Door Switches

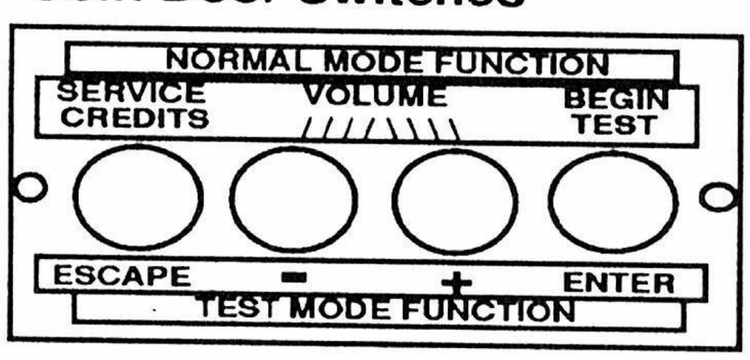

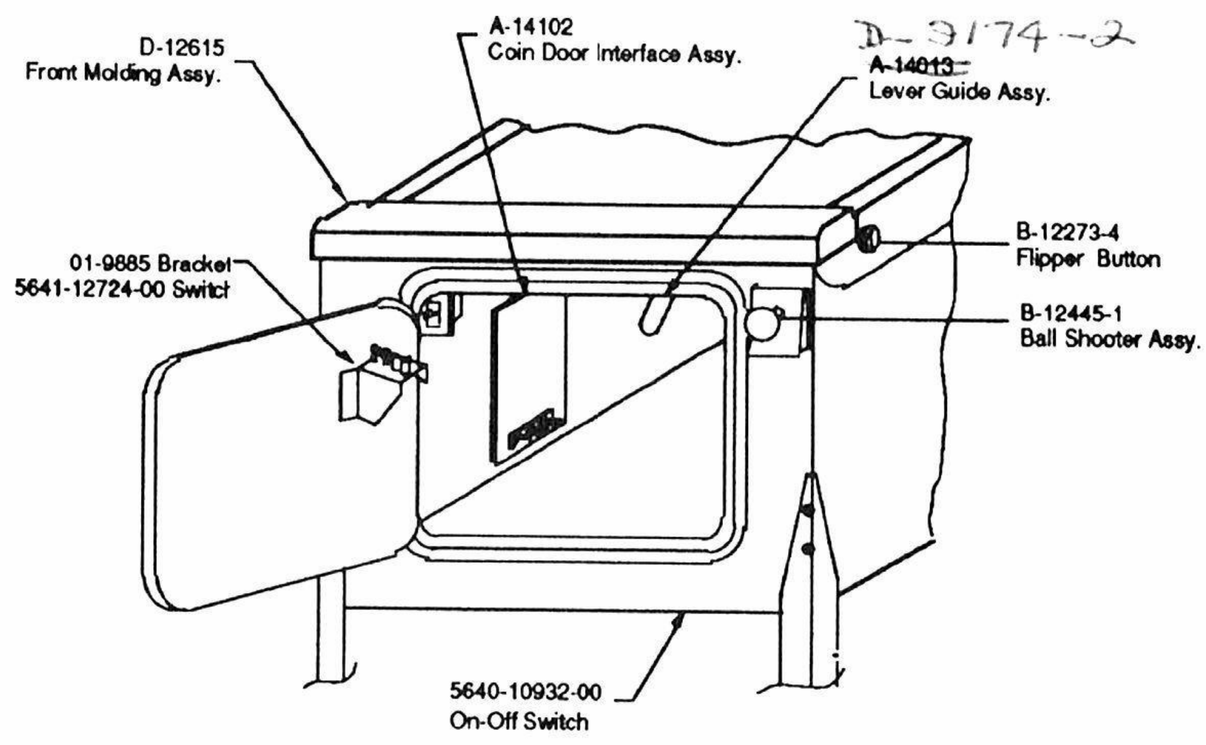

Figure 2. Pinball Game Controls Locations

PINBALL GAME ASSEMBLY INSTRUCTIONS

1. Open the shipping container; remove all cartons, parts, and other items, and set them aside.

2. Place the cabinet on a support and attach rear legs using leg bolts. Leg levelers and leg bolts are provided among the parts in the cash box.

3. Attach the front legs (after installing leg levelers), using leg bolts. See Figure 3 for details.

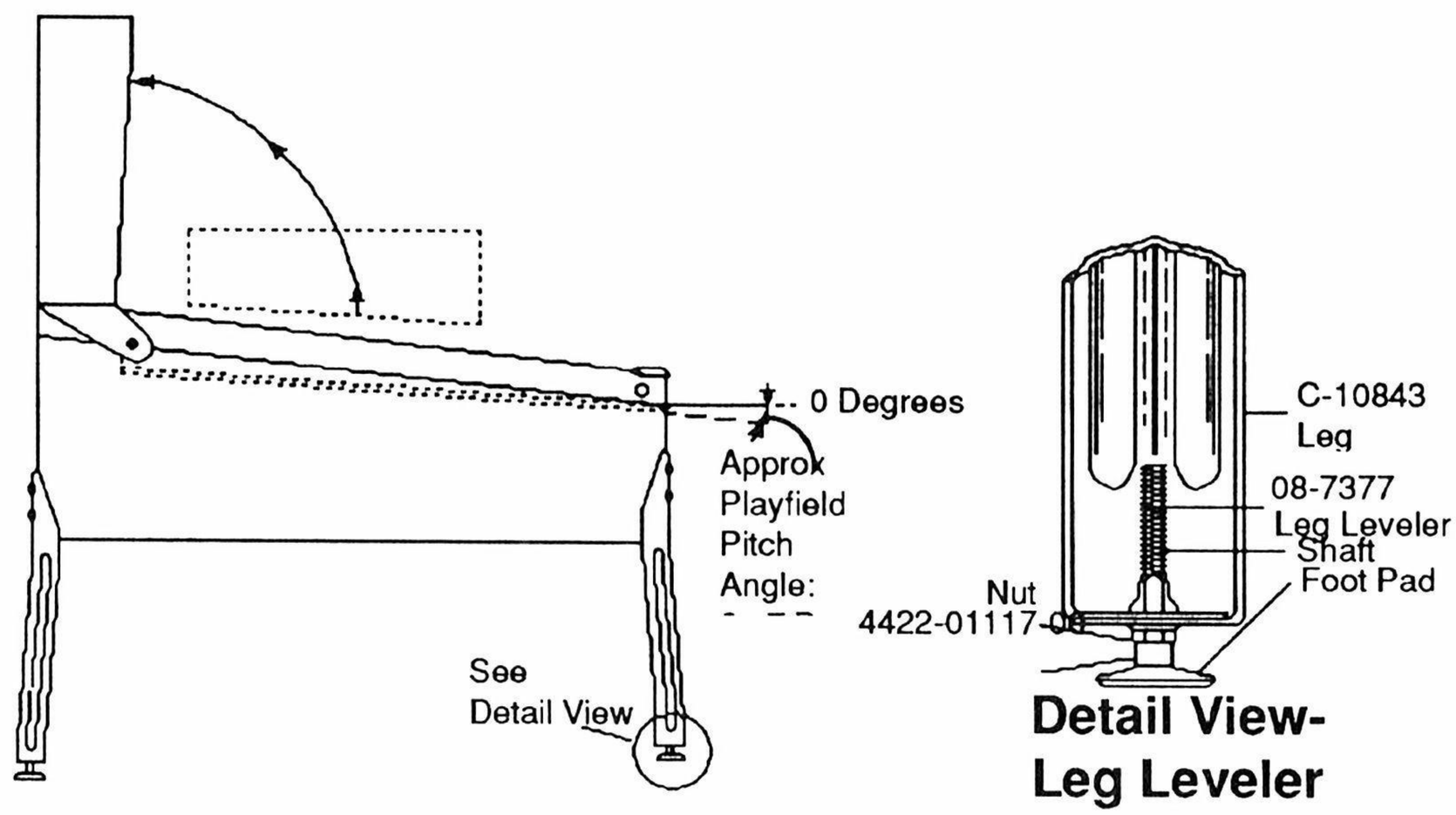

Figure 3. Pinball Assembly, Playfield Pitch Angle, and Leg Leveler Details.

4. Reach into the cabinet and backbox and ensure that the interconnecting cables are free to move (not kinked or pinched). Be careful to avoid damaging wires at any stage of the assembly process.

5. Raise the hinged backbox upright and latch it into position. Unlock the backbox, and remove the backglass, storing it carefully to avoid scratches. Remove the shipping block holding the Insert Board. Unlatch and open the Insert Board. This allows access to the bolt holes used for securing the backbox upright. Install the washer-head mounting bolts through the bottom holes of the backbox into the threaded fasteners in the cabinet to secure the backbox. Close the Insert Board and latch it in position. Reinstall the backglass, and lock the backbox.

FAILURE TO INSTALL the backbox mounting hardware properly can cause personal injury.
NEVER TRANSPORT a pinball game with the hinged backbox erect. *Always* lower the backbox forward onto the playfield cabinet on a layer of protective material to prevent marring or damage and possible personal injury.

6. Extend each leg leveler *slightly* below the leg bottom, so that all four foot pads are extended about the same distance. Remove the cabinet from its support and place it on the floor.

7. Unlock and open the coin door. Locate the Molding Latch Lever, and move the lever toward the left side of the game, to release the Front Molding. Lift the Front Molding off the playfield cover glass return the Latch Lever toward the right, and close the coin door. *Carefully* slide the glass downward, until it clears the grooves of the Left and Right Side Moldings. Lift the glass up and away from the game, storing it carefully to avoid breakage.

8. Place a level or an inclinometer on the playfield surface. Adjust the leg levelers for proper playfield level (side-to-side) *and* playfield pitch angle (incline) of approximately 6-7 degrees. NOTE: It is recommended that these measurements be made ON the playfield, not the cabinet nor the playfield cover glass. Tighten the nut on each leg leveller shaft to maintain this setting, as shown in Figure 3.

CAUTION

Playfield pitch angle adjustments can affect the operation of the plumb bob tilt, inside the cabinet. The plumb bob weight is among the parts in the cash box; the operator should install the weight and adjust this tilt mechanism for proper operation, after completion of the desired playfield pitch angle setting.

9. Move the game into the desired location; recheck the level and pitch angle of the playfield.

10. Verify that the ***required number*** of balls are installed in the game. **Harley-Davidson** uses 3 balls.

11. Install playfield mylars if desired.

12. Clean and reinstall the playfield cover glass, reversing the procedure of step 7. Prepare the game for player operation.

GAME OPERATION

After assembly and installation at its site location, this game must be plugged into a properly grounded outlet to prevent shock hazard, and to assure proper game operation. DO NOT use a 'cheater' plug to defeat the ground pin on the line cord. DO NOT cut off the ground pin.

POWERING UP. Perform the following 'power up' routine upon completion of the assembly and installation procedure, as well as at the beginning of each period of game operation. Initially, it will confirm that the game is in proper operating condition; later, it will aid the operator via its messages (refer to later text entitled "Problem Analysis Messages").

Procedure. With the coin door closed, plug the game in, and switch it ON, using the On-Off switch. In normal operation, the displays initially show the last score. Then, the game goes into the Attract Mode (playfield and backbox lamps flashing, sounds being heard, etc., if the operator does not change the Factory Setting).

Open the coin door and press the BEGIN TEST switch to begin the game test routine. The left score display shows the game name, and the right score display shows the game number and game software revision. The message changes. The left score display shows the sound software revision, and the right score display shows the revision level of the system software and the date the game software was revised.

Harley-Davidson		**Sound Rev. L-1**	
20001	**Rev. L-1**	**SY. 0.90**	**1-3-91**

Perform the entire test menu routine to verify that the game is operating satisfactorily (refer to later text entitled "Menu System Operation"). Successful completion of the tests shows that the game is ready to begin earning your investment return.

After the game has been on location for a period of time, the test routine may be preceded by messages concerning game problems. The text entitled 'Problem Analysis Messages' contains more details concerning messages displayed at each game turn-on.

ATTRACT MODE*. Playfield and backbox lamps blink. The player score displays exhibit a series of messages informing the player concerning:

A. Recent highest scores*;
B. A "custom message"
C. The score to achieve to obtain a Replay award*;

These (or similar) displays reappear occasionally, accompanied by sounds and music, until a player initiates game play by inserting a coin or, when credits are available, pressing the Start button.

* - operator-adjustable feature

CREDIT POSTING. Insert coin(s). A sound is heard for each coin, and the player score displays show the number of credits purchased. So long as the number of maximum allowable credits* are *NOT* exceeded by coin purchase or high score, credits are posted correctly.

STARTING A GAME. Press the Start button once. A startup sound plays, and the Credit amount shown in the player score display decreases by one. The left score display flashes 00 (until the first playfield switch is actuated), and the right score display shows ball 1, except for 4-player games where the ball # shows in the individual player's display. Additional players may enter the game by pressing the Start button once for each player, before the end of play on the first ball.

TILTS. Actuating the Slam Tilt switch on the coin door inside the cabinet ends the current game and then proceeds to the Game Over Mode. With the third closure* of the plumb bob tilt switch, the player loses the remaining play of that ball, but can complete the game.

END OF GAME. All earned scores and bonuses are awarded. If a player's final score exceeds the specified value, the player receives a designated award for achieving the current highest score. A random digit set* appears in the display. Credit* may be awarded, when the last two digits of any player's score display (1 through 4) match the random digits. Match, high score, and game over sounds are made, as appropriate.

GAME OVER MODE. The GAME OVER display shows in the player score displays. Then, the high scores flash on the appropriate player score displays. The game proceeds to the Attract Mode.

* - operator-adjustable feature

MENU SYSTEM OPERATION

Harley Davidson operates on a Menu System. The Main Menu allows you to choose from several main categories, which in turn lead to other menus to choose from. To enter the Menu System, open the coin door and press the Begin Test button. The displays show the Game I.D. Mode. Press the Enter button and the Main Menu appears. To cycle through the Main Menu selections press either the Up or Down button. Activate any selection by pressing the Enter button when the desired selection appears in the displays. To return to the Attract Mode while viewing the Main Menu, or to return to a previous menu selection, press the Escape button. Press the Start button for HELP at any time.

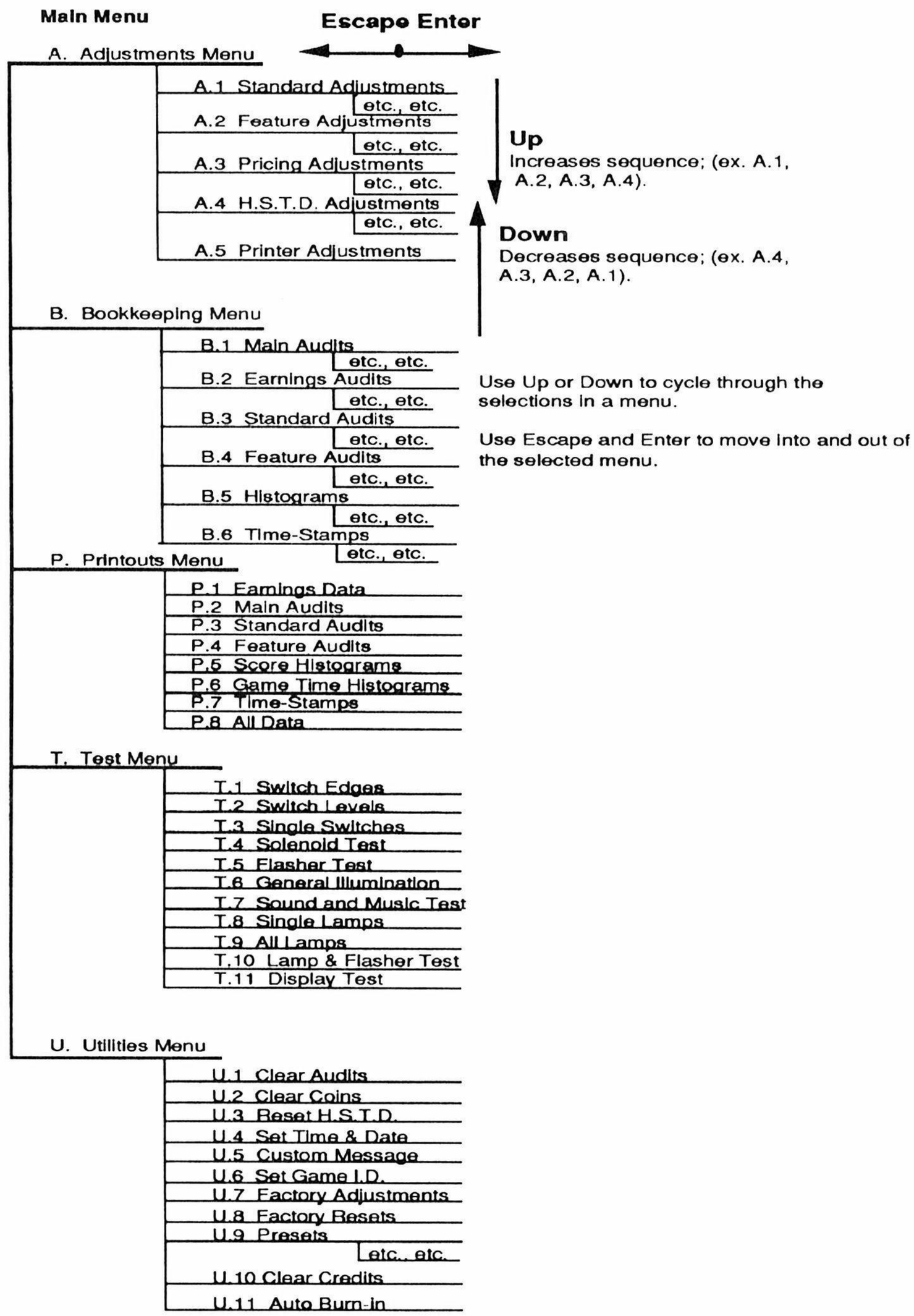

MAIN MENU

A. **Adjustments**
B. **Bookkeeping**
P. **Printouts** (optional board required)
T. **Tests**
U. **Utilities**

The game Adjustments are the first category available from the Main Menu. Press the Enter button to activate the Adjustments Menu. Press the Up or Down button to cycle through the Adjustment Menu selections. Press the Enter button to activate the desired Adjustment Group when that group appears in the displays.

A. ADJUSTMENTS MENU

A.1 **Standard Adjustments**
A.2 **Feature Adjustments**
A.3 **Pricing Adjustments**
A.4 **H.S.T.D Adjustments**
A.5 **Printer Adjustments** (optional board required)

Once you have entered the adjustment group desired, press the Up or Down button to cycle through the available adjustments in that group. When the desired adjustment appears press the Enter button to activate that adjustment. When an adjustment is activated, the setting value begins to flash. Use the Up or Down button to raise or lower the setting value. When the desired value is displayed press Enter to lock in the value. IF you realize you have made an error, press the Escape button while "Saving Adjustment Value" is displayed. The new value is ignored and the original value is retained.

A.1 Standard Adjustments

A.1 01 **Balls Per Game**
The operator defines a "game" by specifying the number of balls to be played. The range of this setting is 1 through 10.

A.1 02 **Tilt Warnings**
The operator specifies the number of total actuations of the plumb bob mechanism that can occur before the game is "tilted". The range of this setting is 1 through 10.

A.1 03 **Maximum Extra Balls**
The operator chooses the number of Extra Balls that a player may accumulate. The range of this setting is 1 through 10, or "No Extra Ball" (extra ball disabled).

A.1 04 **Maximum Extra Balls/Ball in Play**
The operator chooses the number of Extra Balls to be awarded per ball in play. The range of this setting is:

OFF	-	No maximum number of Extra Ball per ball in play.
1-10	-	1 through 10 Extra Balls per ball in play.

A.1 05 Replay System

The operator chooses the replay system to be used. The choices are:

Fixed -	Replay value is set by the operator and does not change during game play.
Auto% -	Replay starting value is set by the operator and changes every 50 games to comply with the percentage of replays desired.

A.1 06 Replay Percent*

The operator chooses the percentage of replays the players are able to earn when Auto Replay is used. The range of this setting is 5% to 50%.

A.1 07 Replay Start*

The operator chooses the replay starting value when Auto% Replay is used. The range of this setting is 1, 000, 000 to 15, 000, 000.

A.1 08 Replay Levels*

The operator chooses the number of replay levels used by the Auto% Replay mode. The range of this setting is 1 through 4. When the operator chooses two replay levels, the second replay level is automatically adjusted to twice the starting replay level value. When three of four replay levels are chosen, their values are automatically adjusted to three or four times the starting replay level value.

A.1 09 Replay Level 1**

The operator chooses the value to be used for the first Fixed Replay. The range of this setting is 00 to 25, 000, 000.

A.1 10 Replay Level 2**

The operator chooses the value to be used for the second Fixed Replay. The range of this setting is 00 to 25, 000, 000.

A.1 11 Replay Level 3**

The operator chooses the value to be used for the third Fixed Replay. The range of this setting is 00 to 25, 000, 000.

A.1 12 Replay Level 4**

The operator chooses the value to be used for the fourth Fixed Replay. The range of this setting is 00 to 25, 000, 000.

A.1 13 Replay Boost

The operator chooses if the replay score can be temporarily boosted by the selected amount EACH time the player reaches or exceeds the replay score. This temporary boost is cancelled when Credits=0, when the player inserts another coin, or when Begin Test is pressed. The choices are:

ON -	Score is boosted between 500, 000 and 5, 000, 000 points.
OFF -	The replay score is not boosted.

*For Auto % Replay. ** For Fixed Replay

A.1 14 **Replay Award**

For either Auto% Replay or Fixed Replay the operator can choose the form of the award automatically provided when the player exceeds any replay level. The choices are:

Credit -	Reaching each Replay level awards credit.
Ticket -	Reaching each Replay level awards a ticket.
Ball -	Reaching each Replay level awards an Extra Ball.
Audit -	Reaching each Replay level awards nothing to the player; it does increase the entry value of the Audit Item(s) maintaining a tally of these awards.

A.1 15 **Special Award**

The operator can choose the award automatically provided when the player scores a special. The choices are:

Credit -	Scoring a Special awards a Credit.
Ticket -	Scoring a Special awards a Ticket.
Ball -	Scoring a Special awards an Extra Ball.
Points -	Scoring a Special awards 1 Million points.

A.1 16 **Match Award**

The operator can choose the award automatically provided when the players wins a match. The choices are:

Credit -	Winning a Match awards a Credit.
Ticket -	Winning a Match awards a Ticket.

A.1 17 **Extra Ball Ticket**

The operator can choose whether a Ticket is awarded when the player earns an Extra Ball. The choices are:

YES -	The player is awarded a Ticket in addition to an Extra Ball.
NO -	The player is not awarded a Ticket.

A.1 18 **Maximum Ticket/Player**

The operator can choose the amount of Tickets each player can earn. The range of this setting is 00 to 100.

A.1 19 **Match Feature**

The operator can choose the desired percentage for the Match Feature occuring at the end of the game. The range of this setting is:

OFF -	Match Feature is not available.
1-50% -	1% is 'hard'; 50% is 'extremely easy'. During the Match Feature the game selects a random two-digit number at the end of the game and compares each players score for an identical two digits in the rightmost two positions. A matching of these two digits results in award of a Credit or a Ticket.

A.1 20 **Custom Message**
The operator chooses if a message is displayed during the Attract Mode. The choices are:

YES - A message is displayed
NO - A message is not displayed.

A.1 21 **Language**
The operator chooses what language the game uses. The choices are, English, French, or German.

A.1 22 **Clock Style**
The operator chooses what style of clock the game uses. The choices are A.M./P.M. or 24 Hours.

A.1 23 **Date Style**
The operator chooses what style of date the game uses. The choices are Month/Date/Year, or Date/Month/Year.

A.1 24 **Show Date and Time**
The operator chooses whether the date and time show in the Attract Mode. The choices are:

YES - Show the date, time in status report or in the Attract Mode.
NO - Do Not show date, time in status report or in the Attract Mode.

A.1 25 **Allow Dim Illumination**
The operator chooses whether to allow the game program to dim the General Illumination for special effects and during the Attract Mode. The choices are:

YES - Dim the General Illumination during the Attract Mode.
NO - Do Not dim the General Illumination.

A.1 26 **Tournament Play**
The operator chooses whether to equalize Multi-ball and Jackpots during multi-player games, (do not carry over to next player). The choices are:

YES - Keep Multi-ball and Jackpots equal.
NO - Do Not Keep Multi-ball and Jackpots equal.

A.1 27 **Euro. Scr. Format**
The operator chooses whether to have commas or dots between digits when numbers are displayed. The choices are:

YES - Dots instead of commas, (example- 1.000.000).
NO - Commas instead of dots, (example- 1, 000, 000).

A.1 28 **Minimum Volume Control**
The operator chooses whether the volume can be turned Off. The choices are:

YES - Volume can be turned Off.
NO - Volume can be turned Down but not Off.

Press the Escape button to return to the Adjustments Menu. Press the Up button to advance to the next desired Adjustments Group, (or press the Down button to return to a previous group). Press the Enter button to activate. Use the Up or Down button to cycle through the available adjustments.

A.2 Feature Adjustments

A.2 01 Multi-ball Level

The operator chooses the difficulty level for achieving Multi-ball. The choices are: Easiest, Easier, Easy, Semi-easy, Medium, Semi-Hard, Hard, Harder, Hardest. Settings from Semi-hard to Hard use a timer.

A.2 02 Multi-ball Timer

The operator chooses the length of time a player has to complete Multi-ball. The range of this setting is 5 to 30 seconds.

A.2 03 Jackpot Multi. Max.

The operator chooses the value that the Jackpot is multiplied by. The range of this setting is Multiplied by 1 to Multiplied by 10.

A.2 04 Jackpot Timer

The operator chooses the length of time a player has to complete Jackpot. The range of this setting is 5 to 30 seconds .

A.2 05 Extra Ball Percent

The operator chooses the percent of Extra Ball awards that can be achieved. The range of this setting is Off, 1% to 99%.

A.2 06 Extra Ball Stacking

The operator chooses whether the player can accrue Extra Balls. The choices are:

On - The player can accrue Extra Balls.
Off - The player cannot accrue Extra Balls.

A.2 07 Ex. Ball Lit Mem.

The operator chooses whether the Extra Ball light, when lit, is stored in memory or reset at the start of the next ball. The choices are:

On - Extra Ball light, when lit, is remembered from ball to ball.
Off - Extra Ball light, when lit, is reset at the start of the next ball.

A.2 08 Consol. Ex. Ball

The operator chooses whether the Outlane lights for a player with a final score of under 1 Million giving that player a chance for an Extra Ball. This option is automatically turned Off if the players final score is over 1 Million. The choices are:

On	-	The Outlane does light.
Off	-	The Outlane does not light.

A.2 09 Lt. Million Timer

The operator chooses the length of time a player has to achieve a Million from the left side Million light. The range of this setting is 5 to 60 seconds.

A.2 10 Rt. Million Timer

The operator chooses the length of time a player has to achieve a Million from the right side Million light. The range of this setting is 5 to 60 seconds.

A.2 11 L. Adv. City Timer

The operator chooses the length of time a player has to advance a city from the left side Advance a City light. The range of this setting is 10 to 99 seconds.

A.2 12 R. Adv. City Timer

The operator chooses the length of time a player has to achieve a city from the right side Advance a City light. The range of this setting is 10 to 99 seconds.

A.2 13 Speed Bonus Start

The operator chooses the starting value of the Speed Bonus. The range of this setting is 1 Million to 5 Million.

A.2 14 Speed Bon. Timer

The operator chooses the length of time a player has to achieve the Speed Bonus. The range of this setting is 15 to 60 seconds.

A.2 15 Harley Bon. Start

The operator chooses the starting value of the Harley Bonus. The choices are: 25K, 50K, 100K, 200K, 300K, 500K.

A.2 16 Harley Bon. Timer

The operator chooses the length of time a player has to achieve the Harley Bonus. The range of this setting is 5 to 60 seconds.

A.2 17 **Speed Trap Level**
The operator chooses the difficulty level of the Speed Trap. The choices are: Easiest, Easy, Medium, Hard, Hardest.

A.2 18 **Speed Trap Timer**
The operator chooses the length of time a player has to achieve the Speed Trap. The range of this setting is 10 to 60 seconds.

A.2 19 **Ticket Feature**
The operator chooses whether the Ticket feature removes points from the players score. The choices are:

On - The feature does remove points.
Off - The feature does not remove points.

A.2 20 **Bike Value Mem.**
The operator chooses whether the Bike value is stored in memory, or reset at the start of the next ball. The choices are:

On - The Bike value is remembered from ball to ball.
Off - The Bike value is reset at the start of the next ball.

A.2 21 **City Start**
The operator chooses what city the player starts at. The choices are: L.A., Salt Lake, Sturgis, Milw., Chicago.

A.2 22 **Bonus Score Mem.**
The operator chooses whether the Bonus Score is stored in memory, or reset at the start of the next ball . The choices are:

On - The Bonus Score is remembered from ball to ball.
Off - The Bonus Score is reset at the start of the next ball.

A.2 23 **Bonus Multiplier Mem.**
The operator chooses whether the Bonus Multiplier is stored in memory, or reset at the start of the next ball. The choices are:

On - The Bonus Multiplier is remembered from ball to ball.
Off - The Bonus Multiplier is reset at the start of the next ball.

A.2 24 **Shaker Motor**
The operator chooses the degree the Shaker Motor shakes the game. The choices are: Normal, Mild, and Off. When set to mild the motor dosen't turn On as often.

A.2 25 **Game Flash**
The operator chooses the degree the flashlamps operate. The choices are: Normal and Mild. When set to mild some flashlamps don't turn On as often.

A.2 26 **Attract Mode Sounds**
The operator chooses whether sounds occur during the Attract Mode. The choices are:

On - Sounds occur during the Attract Mode.
Off - Sound do not occur during the Attract Mode.

A.2 27 **Attract Motor**
The operator chooses whether the Shaker Motor operates during the Attract Mode. The choices are:

On - The Shaker Motor operates during the Attract Mode.
Off - The Shaker Motor does not operate during the Attract Mode.

Press the Up button to advance to the next desired Adjustment Group, (or press the Down button to return to a previous Adjustment Group). Press the Enter button to activate that group. Press the Up or Down button to cycle through the available adjustments in that group.

A. 3 Pricing Adjustments

A.3 01 **Game Pricing (if set to custom, then 02 to 09 are available)**
The operator chooses the cost for a game from a selection of Standard pricing or by installing Custom pricing.

A.3 02 **Left Coin Units**
The operator can specify the number of coin units purchased by a coin passing through the left coin chute.

A.3 03 **Center Coin Units**
The operator can specify the number of coin units purchased by a coin passing through the center coin chute.

A.3 04 **Right Coin Units**
The operator can specify the number of coin units purchased by a coin passing through the right coin chute.

A.3 05 **4th Slot Units**
The operator can specify the number of coin units purchased by a coin passing through the fourth coin chute.

A.3 06 Units/Credits

The operator defines the number of coin units required to obtain 1 credit. A coin unit counter in the game program totals the number of coin units purchased through all coin chutes prior to each game. If the total number of these coin units exceeds or matches the Unit per Credit value by a multiple (or more, coin units) of the specified Units per Credit value the Credits display shows the proper number of credits. The coin unit counter retains any remaining coin units, until the start of Ball 2; then the coin unit counter is cleared (its contents are zeroed).

A.3 07 Units/Bonus

The operator can specify that additional credits are to be indicated in the credits display, when a certain number of coin units are accumulated.

A.3 08 Bonus Credits

The operator specifies the number of credits that are awarded when the Units/Bonus level is achieved.

A.3 09 Minimum Units

The operator can specify that No credits are to be posted (indicated in the credit display), until the credits unit counter reaches a particular value, by setting this value to 02 (or more).

A.3 10 Coin Door Type (if set to custom, then 11 to 15 are available)

This adjustment is used to pre-set adjustments 11 to 15 based on standard coin doors (U.S.A., German, etc.).

A.3 11 Collection Text

The operator chooses what coin system is used to display the Earning Audits.

A.3 12 Left Slot Value

The operator can specify the monetary value of the left coin chute.

A.3 13 Center Slot Value

The operator can specify the monetary value of the center coin chute.

A.3 14 Right Slot Value

The operator can specify the monetary value of the right coin chute.

A.3 15 4th Slot Value

The operator can specify the monetary value of the 4th coin chute.

A.3 16 Maximum Credits

The operator can specify the maximum number of credits the game can accumulate, either through game play awards or coin purchases. The range of this setting is 5 through 10. Reaching the specified setting prevents the award of any credits.

A.3 17 **Free Play**

The operator can specify whether a player can operate the game without a coin (free play) or with a coin. The choices are:

NO	-	A coin is necessary for game play.
YES	-	Game play is free; no coin required.

A.3 18 **Hide Coin Audits**

The operator chooses whether or not to show the coin audits. The choices are:

YES	-	The coin audits are not displayed.
NO	-	The coin audits are displayed.
HIDE NAMES	-	The coin audit value is shown but not the audit name.

A.3 19 **1 Coin Buy-in**

If the game pricing is set to 1 for 50¢/2 for $1.00 the operator chooses whether the player is allowed to 'buy-in' a subsequent game for 1 coin. The number of games that may be purchased at this cost is determined by the number of players in the previous game; that is, if the previous game had three players, 3 Credits can be purchased at the rate of 1 coin per credit. The choices are:

YES	-	The player has 10 seconds to buy-in at 1 coin per game.
NO	-	The buy-in feature is disabled.

Pricing Table

Country	Coin Chute Left	Coin Chute Center	Coin Chute Right	Games/Coin	Display	Pricing Adjustments A.3 02	03	04	05	06	07	08	09
USA	25¢	-	25¢	1/25¢, 4/$1 [2]	U.S.A. 1								
				1/50¢, 2/75¢, 3/$1 [1,2]	U.S.A. 2								
				1/50¢, 2/$1 [2]	U.S.A. 3								
				1/25¢, 3/$1 [2]	U.S.A. 4								
				1/25¢, 3/50¢, 6/$1	CUSTOM	01	04	01	00	01	02	01	00
				1/25¢, 5/$	CUSTOM	01	00	01	00	01	04	01	00
				1/50¢ ; Add'l game: 25¢	CUSTOM	98	00	98	00	99	00	01	00
Canada	25¢	-	$1.00	1/50¢, 2/75¢, 3/$1 [2]	Canada 1								
				1/50¢, 2/$1 [2]	Canada 2								
Austria	5 Sch	10 Sch	10 Sch	1/2x5 Sch, 3/2x10 Sch [2]	AUSTRIA								
	5 Sch	-	10 Sch	2/5 Sch, 5/10 Schilling	CUSTOM	02	00	05	00	01	00	01	00
Australia	20¢	-	$1	1/3x20¢, 2/$1 [2]	AUSTRAL.								
United Kingdom	10 P	50 P	1£	1/2x10 P, 3/50 P, 7/1£ [2]	U.K								
Switzerland	1 Fr	2 Fr	5 Fr	1/1 Fr, 3/2 Fr, 7/5 Franc [2]	SWISS								
Belgiun	5Fr	20 Fr	50 Fr	1/4 x 5F, 1/20 F, 3/50 Franc[2]	BELGIUM								
West Germany	1 DM	2 DM	5 DM	1/1 DM, 2/2 DM, 7/5 DMark [2,3]	GERMAN 1								
				1/1 DM, 2/2 DM, 6/5 DM [1,2]	GERMAN 2								
				1/1 DM, 3/2 DM, 9/5 DM	CUSTOM	09	18	45	00	05	00	01	00
				1/2x1 DM, 1/2 DM, 3/5 DM	CUSTOM	03	06	15	00	05	00	01	00
				2/1 DM, 5/2 DM, 14/5 DM	CUSTOM	13	26	65	00	05	65	01	00
Netherlands	1 HFl	2.5 HFl	2.5 HFl	1/1 HFl, 3/2.5 Holland Florin [2]	NETHERL.								
	25¢	-	1G	1/25¢, 5/1 Guilder	CUSTOM	01	00	05	00	01	00	01	00
	1G	-	1G	1/1 Guilder [2]	HOLLAND								
Sweden	5 Kr	5 Kr	5 Kr	1/5 Krona [2]	SWEDEN								
France	1 Fr	5 Fr	10 Fr	2/5 F, 4/10 F, 9/2x10 Franc[1,2]	FRANCE								
	1 Fr	5 Fr	10 Fr	1/2x1 F, 3/5 F, 7/10 Franc	CUSTOM	03	15	30	30	05	30	01	00
	5 Fr	10 Fr	10 Fr	1/5 F, 3/10 F, 7/2x10 Franc	CUSTOM	03	15	30	30	10	60	01	15
	5 Fr	10 Fr	10 Fr	1/3x1 F, 2/5 F, 5/10 Franc	CUSTOM	02	10	20	20	05	20	01	00
	5 Fr	10 Fr	10 Fr	2/5 F, 5/10 F, 11/2x10 Franc	CUSTOM	01	05	10	10	02	20	01	05
Italy	200L		500L	1/2x200L, 3/2x500L [2]	ITALY								
Spain	25 P	-	100 P	1/25 P, 5/100 Peseta [2]	SPAIN								
	25 P	-	100 P	1/25 P, 4/100 Peseta	CUSTOM	01	00	04	00	01	00	01	00
	25 P	-	100 P	1/2x25 P, 2/100 Peseta	CUSTOM	01	00	04	00	02	00	01	00
	25 P	-	100 P	1/2x25 P, 3/100 Peseta	CUSTOM	03	00	12	00	04	00	01	06
Japan	100 ¥	-	100 ¥	1/100 Yen [2]	JAPAN								
Antilles, Nthrlnd	25¢	-	1G	1/25¢, 4/1 Guilder [2]	ANTILLES								
Chile	Token	-	Token	1/1 Token [2]	CHILE								
Denmark	1 Kr	5 Kr	10 Kr	1/2x1 Kr, 3/5 Kr, 7/10 Krone [2]	DENMARK								
Finland	1 Mka	-	5 Mka	1/2x1 Mka, 3/5 Markka [2]	FINLAND								
New Zealand	20¢	-	20¢	1/3x20¢ [2]	N. Z.								
Norway	5Kr	-	10 Kr	1/5 Kr, 2/10 Kr, 5/20 Krone [2]	NORWAY								
Argentina	10¢	10¢	10¢	1/1 Token [2]	ARG.								
Greece	10 D	20 D	50 D	1/2x10D, 1/20D, 3/50 Drachma [2]	GREECE								
Hungary	10 F		20 F	1/1x20F, 1/2x10F, 3/2x20 Forint [2]	HUNGARY								

Notes: 1. Factory Default. 2. Standard Setting - Change by pressing Enter button. 3. Other functions are also affected.

Press the Escape button to return to the Adjustment Menu. Press the Up button to advance to the next desired Adjustment Group, (or press the Down button to return to a previous Adjustment Group). Press the Enter button to activate that group. Press the Up or Down button to cycle through the available adjustments in that group.

A.4 H.S.T.D. Adjustments

A.4 01 Highest Scores

The operator specifies whether the game is to maintain a record of the four highest scores achieved to date. The choices are:

OFF - No high scores are recorded, or displayed.
ON - The four highest scores are stored in memory and displayed in the Attract Mode.

A.4 02 H.S.T.D. Award

The operator chooses the award given for achieving the High Score To Date, or the Champion H.S.T.D.. The choices are a Credit or a Ticket.

A.4 03 Champion H.S.T.D.

The operator chooses whether the "Highest" High Score is displayed in the Attract Mode. This score is not cleared when "High Score Reset Every" occurs. The choices are:

ON - The "Highest" High Score is retained in memory and displayed.
OFF - The "Highest" High Score is not retained.

A.4 04 Champion Credits

The operator chooses the number of credits or tickets awarded for a Grand Champion Score. The range of this setting is 00 through 10.

A.4 05 H.S.T.D. 1 Credits

The operator selects the number of credits or tickets to be awarded whenever a player exceeds the previous Highest Score. The range of this setting is 00 to 10.

A.4 06 H.S.T.D. 2 Credits

The operator selects the number of credits or tickets to be awarded whenever a player exceeds the second highest score. The range of this setting is 00 to 10.

A.4 07 H.S.T.D. 3 Credits

The operator selects the number of credits or tickets to be awarded whenever a player exceeds the third highest score. The range of this setting is 00 to 10.

A.4 08 H.S.T.D. 4 Credits

The operator selects the number of credits or tickets to be awarded whenever a player exceeds the fourth highest score. The range of this setting is 00 to 10.

A.4 09 High Score Reset Every

The operator can specify that the game will provide an automatic reset of the displayed "Highest scores", and the number of games to be played before the reset occurs. The values provided upon reset are those selected by the operator in the Back-up High Scores. The range of this setting is OFF (disabled) and 250 to 20, 000.

A.4 10 **Backup Champion**
The operator sets the Back-up Grand Champion Score. The range of this setting is 00 through 99, 900, 000.

A.4 11 **Backup H.S.T.D. 1**
The operator can set the Back-up High Score value. The game automatically restores this value when the High Score Reset Every value is reached. The range of this setting is 00 to 99, 900, 000.

A.4 12 **Backup H.S.T.D. 2**
The operator can set the second Back-up High Score value. The game automatically restores this value when the High Score Reset Every value is reached. The range of this setting is 00 to 99, 900, 000.

A.4 13 **Backup H.S.T.D. 3**
The operator can set the third Back-up High Score value. The game automatically restores this value when the High Score Reset Every value is reached. The range of this setting is 00 to 99, 900, 000.

A.4 14 **Backup H.S.T.D. 4**
The operator can set the fourth Back-up High Score value. The game automatically restores this value when the High Score Reset Every value is reached. The range of this setting is 00 to 99, 900, 000.

Press the Up button to advance to the next desired Adjustment Group, (or press the Down button to return to a previous Adjustment Group). Press the Enter button to activate that group. Press the Up or Down button to cycle through the available adjustments in that group.

A.5 Printer Adjustments (optional board required)

A.5 01 **Column Width**
The operator chooses the column width to be printed. The range of this setting is 22 through 80.

A.5 02 **Lines Per Page**
The operator chooses the amount of lines per page. The range of this setting is 20 through 80.

A.5 03 **Pause Every Page**
The operator chooses whether the printer pauses at the end of a page. The choices are:

YES - The printer does pause.
NO - The printer doesn't pause.

Press the Escape button to return to the Adjustments Menu. Then, either press the Up or Down button to return to a previous Adjustment Menu Group, or press the Escape button again to return to the Main Menu. Once in the Main Menu, either press the Up button to advance to the next menu selection, the Bookkeeping Menu, or press the Down button to to return to a previous Main Menu selection.

Press the Enter button to activate the Bookkeeping Menu, once the menu name is shown under the Main Menu. Then, use the Up or Down button to cycle through the Bookkeeping Menu selections. Press the Enter button to activate the desired Bookkeeping Group when that group appears in the displays.

B. BOOKKEEPING MENU

B.1 Main Audits
B.2 Earning Audits
B.3 Standard Audits
B.4 Feature Audits
B.5 Histograms
B.6 Time-Stamps

Once you have entered the desired Bookkeeping Group, press the Up or Down button to cycle through the available audits in that group. Audits cannot be set, they can only be cleared by using U1 and U2 from the Utilities Menu.

One-Button Audit System

Information from the Bookkeeping Menu is obtainable directly from the Attract Mode. Continually pressing the Enter button, while in the Attract Mode, will cycle through all of the game audits.

B.1 Main Audits These audits (which also appear in other groups) are the most important, and are grouped here for easier access.

B.1	01	Total Earnings	00
B.1	02	Recent Earnings	00
B.1	03	Free Play Percent	00
B.1	04	Average Ball Time	00
B.1	05	Average Game Time	00
B. 1	06	Games Completed	00
B.1	07	Replay Awards	00
B.1	08	Percent Replays	00
B.1	09	Extra Balls	00
B.1	10	Percent Extra Ball	00

Press the Escape button to return to the Bookkeeping Menu. Press the Up button to advance to the next desired Bookkeeping Group, (or press the Down button to return to a previous group). Press the Enter button to activate that group. Press the Up or Down button to cycle through the available audits in that group.

B.2 Earning Audits

B.2	01	Recent Earnings	00
B.2	02	Recent Left Slot	00
B.2	03	Recent Center Slot	00
B.2	04	Recent Right Slot	00
B.2	05	Recent 4th Slot	00
B.2	06	Recent Paid Credits	00
B.2	07	Recent Service Credits	00
B.2	08	Total Earnings*	00
B.2	09	Total Left Slot*	00
B.2	10	Total Center Slot*	00
B.2	11	Total Right Slot*	00
B.2	12	Total 4th Slot*	00
B.2	13	Total Paid Credits*	00
B.2	14	Total Service Credits*	00

* Note: These Audits are NOT Resettable. They are a record of the earnings of the game since the "CLOCK 1ST SET" Time -Stamp.

Press the Escape button to return to the Bookkeeping Menu. Press the Up button to advance to the next desired Bookkeeping Group, (or the Down button to return to a previous Bookkeeping Group). Press the Enter button to activate that group. Press the Up or Down button to cycle through the available audits in that group.

B.3 Standard Audits

B.3	01	Games Started	00
B.3	02	Games Completed•	00
B.3	03	Total Free Play	00
B.3	04	Free Play Percent	00
B.3	05	Replay Awards	00
B.3	06	Percent Replays	00
B.3	07	Special Awards	00
B.3	08	Percent Special	00
B.3	09	Match Awards	00
B.3	10	Percent Match	00
B.3	11	H.S.T.D. Credits	00
B.3	12	Percent H.S.T.D	00
B.3	13	Extra Ball	00
B.3	14	Percent Extra Ball	00
B.3	15	Tickets Awarded	00
B.3	16	Percent Tickets	00
B.3	17	Left Drains	00
B.3	18	Right Drains	00
B.3	19	Average Ball Time	00
B.3	20	Average Game Time	00
B.3	21	Minutes of Play	00
B.3	22	Minutes On	00
B.3	23	Balls Played	00
B.3	24	Tilts	00
B.3	25	Replay 1 Awards	00
B.3	26	Replay 2 Awards	00

• Games Completed is a new feature in WPC. A game is considered completed when the final ball begins. Audit information from an incomplete game is ignored. Therefore operation for test and service do not affect the Audits.

B.3	27	Replay 3 Awards	00
B.3	28	Replay 4 Awards	00
B.3	29	1 Player Games	00
B.3	30	2 Player Games	00
B.3	31	3 Player Games	00
B.3	32	4 Player Games	00
B.3	33	H.S.T.D. Reset Count	00
B.3	34	Burn-in Cycles	00

Press the Escape button to return to the Bookkeeping Menu. Press the Up button to advance to the next desired Bookkeeping Group, (or press the Down button to return to a previous group). Press the Enter button to activate that group. Press the Up or Down button to cycle through the available audits in that group.

B.4 Feature Audits

B.4	01	00
B.4	02	00
B.4	03	00
B.4	04	00
B.4	05	00
B.4	06	00
B.4	07	00
B.4	08	00
B.4	09	00
B.4	10	00
B.4	11	00
B.4	12	00
B.4	13	00
B.4	14	00
B.4	15	00
B.4	16	00
B.4	17	00
B.4	18	00
B.4	19	00
B.4	20	00
B.4	21	00
B.4	22	00
B.4	23	00
B.4	24	00
B.4	25	00
B.4	26	00
B.4	27	00
B.4	28	00
B.4	29	00
B.4	30	00
B.4	31	00
B.4	32	00

Press the Escape button to return to the Bookkeeping Menu. Press the Up button to the advance to the next desired Bookkeeping Group, (or press the Down button to return to a previous Bookkeeping Group). Press the Enter button to activate that group. Press the Up or Down button to cycle through the available audits in that group.

B.5 Histograms

B.5	01	0.0-0.5 Million Scores	00%	00
B.5	02	0.5-1.0 Million Scores	00%	00
B.5	03	1.0-1.5 Million Scores	00%	00
B.5	04	1.5-2.0 Million Scores	00%	00
B.5	05	2.0-3.0 Million Scores	00%	00
B.5	06	3.0-4.0 Million Scores	00%	00
B.5	07	4.0-5.0 Million Scores	00%	00
B.5	08	5.0-6.0 Million Scores	00%	00
B.5	09	6.0-8.0 Million Scores	00%	00
B.5	10	8.0-10 Million Scores	00%	00
B.5	11	10-15 Million Scores	00%	00
B.5	12	15-20 Million Scores	00%	00
B.5	13	Over 20 Million	00%	00
B.5	14	Game Time 0.0-1.0 Mins	00%	00
B.5	15	Game Time 1.0-1.5 Mins	00%	00
B.5	16	Game Time 1.5-2.0 Mins	00%	00
B.5	17	Game Time 2.0-2.5 Mins	00%	00
B.5	18	Game Time 2.5-3.0 Mins	00%	00
B.5	19	Game Time 3.0-3.5 Mins	00%	00
B.5	20	Game Time 3.5-4.0 Mins	00%	00
B.5	21	Game Time 4-5 Mins	00%	00
B.5	22	Game Time 5-6 Mins	00%	00
B.5	23	Game Time 6-8 Mins	00%	00
B.5	24	Game Time 8-10 Mins	00%	00
B.5	25	Game Time 10-15 Mins	00%	00
B.5	26	Game Time Over 15 Mins	00%	00

Press the Escape button to return to the Bookkeeping Menu. Press the Up button to the advance to the next desired Bookkeeping Group, (or press the Down button to return to a previous Bookkeeping Group). Press the Enter button to activate that group. Press the Up or Down button to cycle through the available audits in that group.

B.6 Time-Stamps

The Time-Stamps Menu allows you to view dates and times that are important to game software.

B.6	01	Current Time
B.6	02	Clock 1st Set
B.6	03	Clock Last Set
B.6	04	Audits Cleared
B.6	05	Coins Cleared
B.6	06	Factory Setting
B.6	07	Last Game Start
B.6	08	Last Replay
B.6	09	Last H.S.T.D. Reset
B.6	10	Champion Reset
B.6	11	Last Printout

Press the Escape button to return to the Bookkeeping Menu. Then, either press the Up or Down button to return to a previous Bookkeeping Menu Group, or press the Escape button again to return to the Main Menu. Once in the Main Menu either press the Up button to advance to the next menu selection, the Printouts Menu, or press the Down button to return to a previous Main Menu selection.

Press the Enter button to activate the Printouts Menu, once the menu name is shown under the Main Menu. Then, use the Up or Down button to cycle through the Printouts Menu selections. Press the Enter button to activate the desired Printouts Group when that group appears in the displays.

P. PRINTOUTS MENU

(optional board required)

P.1 Earnings Data
P.2 Main Audits
P.3 Standard Audits
P.4 Feature Audits
P.5 Score Histograms
P.6 Time Histograms
P.7 Time-Stamps
P.8 All Data

The Printouts Menu is a combination of the other menus. This menu allows you to access and print information in the available menu selections.

If no Printer is attached the the message "Waiting for Printer" appears in the displays. Note: Set the print specification from the Adjustment Menu, A.5 Printer Adjustments.

Press the Escape button to return to the Printouts Menu. Then, either press the Up or Down button to return to a previous Printouts Menu Group, or press the Escape button again to return to the Main Menu. Once in the Main Menu press the Up button to advance to the next menu selection, the Test Menu, or press the Down button to return to a previous Main Menu selection.

Press the Enter button to activate the Test Menu, once the menu name is shown under the Main Menu. Then, use the Up or Down button to cycle through the Test Menu selections. Press the Enter button to activate the desired test when that test appears in the displays.

T. TEST MENU

T.1 Switch Edges
T.2 Switch Levels
T.3 Single Switch
T.4 Solenoid Test
T.5 Flasher Test
T.6 General Illumination
T.7 Sound & Music Test
T.8 Single Lamps
T.9 All Lamps
T.10 Lamp & Flasher Tests
T.11 Display Test

T.1 Switch Edges

For all switches, the number on the left indicates the column, the number on the right indicates the row. Example- Switch 23 means 2nd column, 3rd row.

To test the Left and Right Flippers, press the Left or Right Flipper buttons during switch test. The flipper name and switch number should show in the displays. Any other results indicate the system has detected a problem with the flipper circuit.

To activate the Switch Edges Test, from the Test Menu, press the Enter button. The name and number of each switch that is pressed is shown in the displays. If any other switch, or no switch at all is indicated, the system has detected a problem with the switch circuit.

Press Escape to return to the Test Menu. Press the Up button to display the next test, (or the Down button to return to a previous test). Press the Enter button to activate that test.

T.2 Switch Levels

Once the test name is shown under the Test Menu, press the Enter button. The name and number of each switch that is activated is shown in the displays. This test automatically cycles through all switches that are detected closed.

Press the Escape button to return to the Test Menu. Press the Up button to display the next test, (or the Down button to return to a previous test). Press the Enter button to activate that test.

T.3 Single Switches

Once the test name is shown under the Test Menu, press the Enter button. The Single Switch Test isolates a particular switch by blocking signals from all other switches. Use the Up or Down buttons to select the switch to be tested. Either Open or Closed appears in the displays to indicate the state of the switch at the present time. When the switch is activated, an "A" appears in the displays. Press the Start button to obtain wire color, connector, and fuse information of any switch when that switch is displayed.

Press the Escape button to return to the Test Menu. Press the Up button to display the next test, (or the Down button to return to a previous test). Press the Enter button to activate that test.

Switch Matrix

White — Green

Dedicated Grounded Switches	Row \ Column	1 Green-Brown	2 Green-Red	3 Green-Orange	4 Green-Yellow	5 Green-Black	6 Green-Blue	7 Green-Violet	8 Green-Gray
Orange-Brown Left Coin Chute D1	1 White-Brown	Right Flipper 11	Slam Tilt 21	B in Bike 31	U Top Lane 41	H in Harley 51	V in Davidson 61	Left Loop 71	Not Used 81
Orange-Red Center Coin Chute D2	2 White-Red	Left Flipper 12	Front Door 22	I in Bike 32	S Top Lane 42	A in Harley 52	I in Davidson 62	Right Loop 72	Not Used 82
Orange-Black Right Coin Chute D3	3 White-Orange	Start Button 13	Token Dispenser 23	K in Bike 33	A Top Lane 43	R in Harley 53	2nd D in Davidson 63	Left Drain 73	Not Used 83
Orange-Yellow 4th Coin Chute D4	4 White-Yellow	Plumb Bob Tilt 14	Not Used 24	E in Bike 34	Not Used 44	L in Harley 54	S in Davidson 64	Right Drain 74	Not Used 84
Orange-Green Normal Function | Test Function Service Credits | Escape D5	5 White-Green	Outhole 15	Left Jet Bumper 25	Top Right Eject 35	Not Used 45	E in Harley 55	O in Davidson 65	Shooter Lane 75	Not Used 85
Orange-Blue Normal Function | Test Function Volume Down | Down D6	6 White-Blue	Trough 1 16	Right Jet Bumper 26	Top Left Eject 36	Not Used 46	Y in Harley 56	N in Davidson 66	Not Used 76	Not Used 86
Orange-Violet Normal Function | Test Function Volume Up | Up D7	7 White-Violet	Trough 2 17	Lower Jet Bumper 27	Left Sling 37	Not Used 47	1st D in Davidson 57	Right Spinner 67	Not Used 77	Not Used 87
Orange-Gray Normal Function | Test Function Begin Test | Enter D8	8 White-Gray	Trough 3 18	Lower Right Eject 28	Right Sling 38	Not Used 48	A in Davidson 58	Left Spinner 68	Not Used 78	Not Used 88

Note:
Dedicated Switch are connected directly to ground.

T.4 Solenoid Test

Once the test name is shown under the Test Menu, press the Enter button. The Solenoid Test has three modes, Repeat, Stop, and Running. Only one solenoid should turn On at a time. The system has detected a problem if, more then one solenoid turns On, a solenoid comes On and stays On, or no solenoid turns On during the Repeat or Running test modes. Press the Start button to see the wire color, driver number, connector and, fuse information of any coil, when that coil is displayed.

Repeat - This test allows you to stop and pulse a single coil or flashlamp. Once you have entered the Solenoid Test, coil 1 shows in the displays and the corresponding solenoid activates. Press the Up or Down button to cycle through the solenoids, one at a time, manually. The same solenoid pulses until you press the Up or Down button to move to the next one. Either press the Escape button to return to the Test Menu, or press the Enter button to move to the next test mode.

Stop - This test allows you to stop the Solenoid Test at any point. Press Enter during the Repeat test mode and the Solenoid Test stops. There should not be any solenoids activated while the test is stopped. Either press the Escape button to return to the Test Menu, or the Enter button to move to the next test mode.

Running - This test allows you to cycle through the solenoids automatically. Press the Enter button during the Stop test mode. The displays show you the name and number of the solenoid currently being pulsed.

Either press the Enter button to return to the Repeat test mode, or press the Escape button to return to the Test Menu. Once in the Test Menu press, the Up button to display the next test, (or the Down button to return to a previous test). Press the Enter button to activate that test.

T.5 Flasher Test

Once the test name is shown under the Test Menu, press the Enter button. This test allows you to test the flashlamp part of the solenoid circuit exclusively. This test, like the Solenoid Test, has three test modes Repeat, Stop, and Running. During this test, only one flashlamp circuit should turn On at a time. If, more then one flashlamp circuit turns On, or stays On, or no flashlamp circuit turns On at all during the Repeat or Running test modes the system has detected a problem. Press the Start button to see the wire color, driver number, connector, and fuse information of any flashlamp circuit when that circuit appears in the displays.

Repeat - This test allows you to stop and pulse a single flashlamp. Once you have entered the Flasher Test the name and number of the first flashlamp circuit shows in the displays and the corresponding bulb(s) flashes. Press the Up or Down button to cycle through all of the flashlamps circuits one at a time, manually. The same flashlamp circuit pulses until you press the Up or Down button to move to the next one. Either, press the Escape button to return to the Test Menu, or press the Enter button to advance to the next test mode.

Stop - This test allow you to stop the Flasher Test at any time. Press the Enter button during the Repeat test mode. The Flasher Test stops. There should not be any flashlamp circuit turned On during this test mode. Either press the Escape button to return to the Test Menu, or press the Enter button to advance to the next test mode.

Running - This test allows you to cycle through the flashlamps automatically. Press the Enter button during the Stop test mode. The displays show you the name and number of the flashlamp currently being pulsed, and the corresponding bulb(s) flashes.

Either press the Enter button to return to the Repeat test mode or, press the Escape button to return to the Test Menu. Once in the Test Menu, press the Up button to display the next test, (or the Down button to return to a previous test). Press the Enter button to activate that test.

Solenoid Table

Sol. No.	Function	Solenoid Type	Wire Color	Connections	Driver Trnstr	Solenoid Part Number Flashlamp Type
01	Outhole	High Power	Vio-Brn	J130-1	Q82	AE-26-1200
02	Ball Shooter Lane Feeder	High Power	Vio-Red	J130-2	Q80	AE-26-1200
03	Left Drop Bank	High Power	Vio-Orn	J130-4	Q78	AE-26-1200
04	Center Drop Bank	High Power	Vio-Yel	J130-5	Q76	AE-26-1200
05	Left Jet Bumper	High Power	Vio-Grn	J130-6	Q64	AE-26-1200
06	Right Jet Bumper	High Power	Vio-Blu	J130-7	Q66	AE-26-1200
07	Knocker	High Power	Vio-Blk	J130-8	Q68	AE-23-800
08	Lower Jet Bumper	High Power	Vio-Gry	J130-9	Q70	AE-26-1200
09	Lower Right Eject	Low Power	Brn-Blk	J127-1	Q58	AE-26-1500
10	Top Right Eject	Low Power	Brn-Red	J127-3	Q56	AE-26-1500
11	Top Left Eject	Low Power	Brn-Orn	J127-4	Q54	AE-26-1500
12	Top Right Gate	Low Power	Brn-Yel	J127-5	Q52	A-14406
13	Top Left Gate	Low Power	Brn-Grn	J127-6	Q50	A-14406
14	Not Used	Low Power	Brn-Blu	J127-7	Q48	
15	Left Sling	Low Power	Brn-Vio	J127-8	Q46	AE-26-1500
16	Right Sling	Low Power	Brn-Gry	J127-9	Q44	AE-26-1500
17	Top Right Flasher	Flasher	Blk-Brn	J126-1	Q42	#906
18	Top Left Flasher	Flasher	Blk-Red	J126-2	Q40	#906
19	Right Million Flasher	Flasher	Blk-Orn	J126-3	Q38	#906
20	Left Million Flasher	Flasher	Blk-Yel	J126-5	Q36	#906
21	Speed Bonus Flasher	Special	Blu-Grn	J126-6	Q28	#906
22	Jackpot Flasher	Special	Blu-Blk	J126-7	Q30	#906
23	Speed Trap Flasher	Special	Blu-Vio	J126-8	Q34	#89
24	Helicopter Flasher	Special	Blu-Gry	J126-9	Q32	#89
25	Lower Right Flasher	Special	Blu-Brn	J122-1	Q26	#89
26	Lower Left Flasher	Special	Blu-Red	J122-3	Q24	#89
27	Shaker Motor	Special	Blu-Orn	J122-4	Q22	14-7951
28	Jet Flasher	Special	Blu-Yel	J122-5	Q20	#906
	General Illumination Circuits					
01	String 1	G.I.	Wht-Brn	J120-7	Q18	#555
02	String 2	G.I.	Wht-Vio	J119-1	Q10	#555
03	String 3	G.I.	Wht-Yel	J121-9	Q14	#555
04	String 4	G.I.	Wht-Orn	J120-8	Q16	#555
05	String 5	G.I.	Wht-Grn	J120-10	Q12	#555
	Lower Right Flipper		Blu-Yel	J109-7		FL-11630
	Lower Left Flipper		Gry-Yel	J109-5		FL-11630

T.6 General Illumination

Once the test name is shown under the Test Menu, press the Enter button. This test allows you to check all of the General Illumination circuits. There are two modes of operation, Stop and Run. To obtain wire color, driver number, connector, and fuse information, press the Start button when the desired General Illumination circuit appears in the displays.

Stop - Press the Up or Down buttons to cycle through the General Illumination Test manually. All illumination is tested first, followed by an individual circuit test. The circuit name and number shows in the displays while the corresponding lamps lights. If any other results occur the system has detected an error.

Run - Press the Enter button any time during Stop test mode and the General Illumination Test cycles through automatically. For each circuit shown in the displays the corresponding bulbs should light. If any other results occurs the system has detected a problem.

Either press the Enter button to return to Stop test mode, or the Escape button to return to the Test Menu. Once in the Test Menu press the Up button to advance to the next test, (or the Down button to return to a previous test). Press the Enter button to activate that test.

T.7 Sound and Music Test

Once the test name is shown under the Test Menu, press the Enter button. The Sound and Music Test allows you to check the audio circuits. This test has three modes for testing the sound and music circuits, Running, Repeat and Stop.

Running - This test steps through a sequence of sounds and music. Pressing the Up or Down button during this portion of the Sound and Music test allows you to advance to a particular sound or tune without having to wait for the program to play all the sounds available in the test. For each name and number that appears in the displays a sound or tune should be heard. Any other results indicates the system has detected a problem.

Repeat - Press the Enter button at any time during the Running test mode to cause the program to stop and repeat a particular sound or tune. The same sound should repeat continuously until the Up or Down button is pressed. Any other results indicates the system has detected a problem.

Stop - Press the Enter button at any time during the Repeat test mode to stop this test altogether. Nothing should be heard. Any other results indicates the system has detected a problem.

Use the Enter button to return to the Running test mode, or the Escape button to return to the Test Menu. Once in the Test Menu press the Up button to display the next test, (or the Down button to return to a previous test). Press the Enter button to activate that test.

T.8 Single Lamp Test

For all lamps, the number on the left indicates the column, the number on the right indicates the row. Example- Lamp 23 means 2nd column, 3rd row.

Once the test name is shown under the Test Menu, press the Enter button. This test allows you to test each lamp circuit individually. Press the Up or Down button to cycle through this test. For each name and number that is shown in the displays the corresponding lamp should light. Any other results indicates the system has detected a problem. Press the Start button to obtain wire color, connector, and fuse information when the desired lamp is lit.

Press the Escape button to return to the Test Menu. Press the Up button to display the next test, (or the Down button to return to a previous test). Press the Enter button to activate that test.

T.9 All Lamps Test

Once the test name is shown under the Test Menu, press the Enter button. This test causes all the controlled lamps to flash at the same time. Every controlled lamp should flash. Any other results indicates the system has detected a problem.

Press the Escape button to return to the Test Menu. Press the Up button to display the next test, (or the Down button to return to a previous test). Press the Enter button to activate that test.

T.10 Lamp and Flasher Test

Once the test name is shown under the Test Menu, press the Enter button. This test causes all the flashlamps and the controlled lamps to flash at the same time. The controlled lamps blink, while the flashlamps cycle from highest to lowest. Any other results indicates the system has detected a problem.

Press the Escape button to return to the Test Menu. Press the Up button to display the next test, (or the Down button to return to a previous test). Press the Enter button to activate that test.

Lamp Matrix

Yellow (B+) 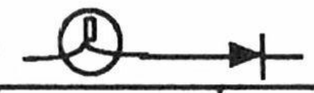 Red

Row \ Column	1 Yellow-Brown	2 Yellow-Red	3 Yellow-Orange	4 Yellow-Black	5 Yellow-Green	6 Yellow-Blue	7 Yellow-Violet	8 Yellow-Gray
1 Red-Brown	Los Angeles 11	Lamp 21 Back Panel 21	1st D in Davidson 31	B in Bike 41	2x Bonus 51	Right Eject Lock 61	Harley Value 50K 71	Left Million 81
2 Red-Black	Salt Lake City 12	Lamp 22 Back Panel 22	A in Davidson 32	I in Bike 42	3x Bonus 52	Right Eject Speed Bonus 62	Harley Value 100K 72	Right Million 82
3 Red-Orange	Sturgis 13	H in Harley 23	V in Davidson 33	K in Bike 43	4x Bonus 53	Right Eject Ex. Ball 63	Harley Value 200K 73	Lamp 83 Back Panel 83
4 Red-Yellow	Milwaukee 14	A in Harley 24	I in Davidson 34	E in Bike 44	5x Bonus 54	Right Eject Jackpot 64	Harley Value 300K 74	Lamp 84 Back Panel 84
5 Red-Green	Chicago 15	R in Harley 25	2nd D in Davidson 35	Left Eject 25K 45	6x Bonus 55	Left Spinner 3K 65	Harley Value 500K 75	Laconia 85
6 Red-Blue	Talladega 16	L in Harley 26	S in Davidson 36	Left Eject 50K 46	U Top Lane 56	Left Advance City 66	Left Drain Extra 76	Daytona 86
7 Red-Violet	Lamp 17 Back Panel 17	E in Harley 27	O in Davidson 37	Left Eject 100K 47	S Top Lane 57	Right Spinner 3K 67	Right Drain Extra 77	York 87
8 Red-Gray	Lamp 18 Back Panel 18	Y in Harley 28	N in Davidson 38	Left Eject 150K 48	A Top Lane 58	Right Advance City 68	Ride Again 78	New York 88

T.11 Display Test

Once the test name is shown under the Test Menu, press the Enter button. This test allows you to cycle through all of the display circuits. Each segment and digit should light in its turn. If a segment or digit never lights, or stays lit all the time, the system has detected a problem. There are two modes for testing the displays, Running and Stop.

Running - This test cycles through several phases automatically. Each phase is designed to test either an entire digit or a specific segment.

Stop - Press the Enter button at any time during the Running test mode and the test stops. Use the Up or Down buttons to cycle through each phase of the test manually. Press the Enter button again to resume the Running test mode.

Press the Escape button to return to the Test Menu. Then, either press the Up or Down button to return to a previous Test, or press the Escape button again to return to the Main Menu. Once in the Main Menu, press the Up button to move to the next menu selection, the Utilities Menu, or press the Down button to return to a previous Main Menu selection.

Press the Enter button to activate the Utilities Menu, once the menu name is shown under the Main Menu. Then, use the Up or Down button to cycle through the Ulility Menu selections. Press the Enter button to activate the desired Utility or Utility Group when it appears in the displays. If you change a utility setting and realize you have made a mistake, press the Escape button while "Saving Adjustment Value" is still in the displays. The original setting is retained and the new setting is ignored.

U. UTILITIES MENU

U.1 Clear Audits
U.2 Clear Coins
U.3 Reset H.S.T.D.
U.4 Set Time & Date
U.5 Custom Message
U.6 Set Game I.D.
U.7 Factory Adjustments
U.8 Factory Resets
U.9 Presets
U.10 Clear Credits
U.11 Auto Burn-in

U.1 Clear Audits

Press the Enter button to clear the Standard Audits, Feature Audits, and Histograms. Press the Up button to display the next utility.

U.2 Clear Coins

Press the Enter button to clear the Earnings Audits. Press the Up button to display the next utility.

U.3 Reset H.S.T.D.

Press the Enter button to clear the High Score to Date Table and the Grand Champion. Press the Up button to display the next utility.

U.4 Set Time and Date

Press the Enter button to activate the time and date. Use the Up or Down button to change the value, then press the Enter button to lock in that value. If you make a mistake press the Escape button while "Saving Adjustment Value" is displayed. Press the Up button to move to the next utility.

U.5 Custom Message

This utility allows the operator to install a message that appears in the displays during the Attract Mode. Press the Enter button to activate the Custom Message. Use the Up or Down button to rotate letters. Use the Start button to rotate punctuation marks, (if desired). Press the Enter button to lock in the desired letter and punctuation. Note: Set Adjustment A.1 20 to YES before trying to write a Custom Message.

U.6 Set Game I.D.

This utility allows the operator to install a message, such as game location, that only appears on printouts . Press the Enter button to activate Set Game I.D.. Use the Up or Down button to rotate letters. Use the Start button to rotate punctuation marks, (if desired). Press the Enter button to lock in the desired letter and punctuation.

U.7 Factory Adjustment

Press the Enter button to restore the adjustments to factory settings, then press the Up button to display the next utility.

U.8 Factory Reset

Press the Enter button to restore the adjustments to their factory setting, clear the Audits, H.S.T.D Table, and Custom Message/Game I.D. Press the Up button to display the next utility.

U.9 Presets

Press the Enter button to activate the Presets Group. Use the Up or Down buttons to cycle through the available Presets. When the desired Preset is displayed, press the Enter button to lock in that Preset. If you realize you have made a mistake, press the Escape button while "Saving Adjustment Value" is displayed. The new value is ignored and the original value is retained.

U.9 01 Install Extra Easy

The operator can change the game play difficulty adjustments to a combination that is MUCH LESS difficult than the Factory Settings. The Game Difficulty Setting Table lists the adjustments and the settings that comprise the 'Extra Easy' Group.

U.9 02 Install Easy

The operator can change the game play difficulty adjustments to a combination that is somewhat LESS difficult than the Factory Settings. The Game Difficulty Setting Table lists the adjustments and the settings that comprise the 'Easy' Group.

U.9 03 Install Medium

The operator can change the game play difficulty adjustments to a combination that is about the SAME difficulty as the Factory Settings. The Game Difficulty Setting Table lists the adjustments and settings that comprise the 'Medium' Group.

U.9 04 Install Hard

The operator can change the game play difficulty adjustments to a combination that is somewhat MORE difficult than Factory Settings. The Game Difficulty Setting Table lists the adjustments and settings that comprise the 'Hard' Group.

U.9 05 Install Extra Hard

The operator can change the game play difficulty adjustments to a combination that is MUCH MORE difficult than Factory Settings. The Game Difficulty Setting Table lists the adjustments and settings that comprise the 'Extra Hard' Group.

Game Difficulty Setting Table for U.S. / Canadian / French Games

Adj #	Adj Description	Extra Easy U.9 01	Easy U.9 02	Medium U.9 03 (factory)	Hard U.9 04	Extra Hard U.9 05
A.2 01						
A.2 02						
A.2 03						
A.2 04						
A.2 05						
A.2 06						
A.2 07						
A.2 08						
A.2 09						
A.2 10						
A.2 11						
A.2 12						
A.2 13						
A.2 14						
A.2 15						
A.2 16						

Game Difficulty Setting Table for German/European Games

Adj #	Adj Description	Extra Easy U.9 01	Easy U.9 02	Medium U.9 03 (factory)	Hard U.9 04	Extra Hard U.9 05
A.2 01						
A.2 02						
A.2 03						
A.2 04						
A.2 05						
A.2 06						
A.2 07						
A.2 08						
A.2 09						
A.2 10						
A.2 11						
A.2 12						
A.2 13						
A.2 14						
A.2 15						
A.2 16						

U.9 06 **Install 5 Ball**

The operator can change the game to 5 ball play, including the changing of certain features to the recommended 5-ball level. The Preset Game Adjustments Table for U.S./Canadian Games lists the adjustments and settings that comprise the 'Install 5 Ball' Group.

U.9 07 **Install 3 Ball**

The operator can change the game to 3 ball play, including the changing of certain features to the recommended 3-ball level. The Preset Game Adjustments Table for U.S./Canadian Games lists the adjustments and settings that comprise the 'Install 3 Ball' Group.

Preset Game Adjustments Table for U.S./ Canadian Games

Adj #	Adj Description	Install 5-ball U.9 06	Install 3-ball U.9 07
A.1 01	Balls / Game	5	3
A.1 07	Replay Start		
A.2 01			
A.2 02			
A.2 05			
A.2 08			
A.2 12			
A.2 13			
A.2 14			
A.2 15			

U.9 08 **Install Add -A -Ball**

The operator utilizes this option to delete all Free Play awards and replace them with Extra Ball awards. Individual adjustments are affected, as follows:

Ad	Name	New Setting
A.1 13	Replay Boost	Off
A.1 14	Replay Award	Ex. Ball
A.1 15	Special Award	Ex. Ball
A.1 17	Extra Ball Ticket	No
A.1 19	Match Feature	Off
A.4 04	Champion Credits	00
A.4 05	High Score 1 Credits	00
A.4 06	High Score 2 Credits	00
A.4 08	High Score 3 Credits	00
A.4 07	High Score 4 Credits	00

U.9 09 **Install Ticket**

The operator utilizes this option to delete Credit awards and replace them with Ticket awards. Individual adjustments are affected as follows.

Ad	Name	New Settings
A.1 14	Replay Award	Ticket
A.1 15	Special Award	Ticket
A.1 16	Match Award	Ticket
A.1 17	Ex. Ball Ticket	Yes
A.4 02	H.S.T.D. Award	Ticket

U.9 10 **Install Novelty**

The operator utilizes this option to removes all Free Play and Extra Ball awards. Individual adjustments are affected as follows:

Ad	Name	New Setting
A.1 04	Max. Ex. Ball	Off
A.1 05	Replay System	Fixed
A.1 09	Replay Level 1	Off
A.1 10	Replay Level 2	Off
A.1 11	Replay Level 3	Off
A.1 12	Replay Level 4	Off
A.1 15	Special Award	Points
A.1 19	Match Feature	Off
A.4 01	Highest Score	On
A.4 04	Champion Credits	00
A.4 05	High Score 1 Credits	00
A.4 06	High Score 2 Credits	00
A.4 07	High Score 3 Credits	00
A.4 08	High Score 4 Credits	00

U.9 11 **Install Buy-in**

The operator uses this option to automatically set game pricing to 1 for 50¢/2 for $1.00 and 1 Coin Buy-in (A.3 19) to YES.

U.9 17 **Install German 1• • For German Jumpered CPU Boards only.**

The operator uses this adjustment to modify the game pricing and the type of game play. The Preset Game Adjustments Table for German/European Games lists the adjustments and settings that comprise the 'Install German 1' Group.

U.9 18 **Install German 2•**

The operator uses this adjustment to modify the game pricing and the type of game play. The Preset Game Adjustment Table for German/ European Games lists the adjustments and settings that comprise the 'Install German 2' Group.

U.9 19 **Install German 3•**

The operator uses this adjustment to modify the game pricing and the type of game play. The Preset Game Adjustments Table for German/European Games lists the adjustments and settings that comprise the 'Install German 3' Group.

U.9 20 **Install German 4•**
The operator uses this adjustment to modify the game pricing and the type of game play. The Preset Game Adjustments Table for German/European Games lists the adjustments and settings that comprise the 'Install German 4' Group

U.9 21 **Install German 5•**
The operator uses this adjustment to modify the game pricing and the type of game play. The Preset Game Adjustments Table for German/European Games lists the adjustments and settings that comprise the 'Install German 5' Group.

U.9 22 **Install German 6•**
The operator uses this adjustment to modify the game pricing and the type of game play. The Preset Game Adjustments Table for German/European Games lists the adjustments and settings that comprise the 'Install German 6' Group.

Preset Game Adjustments Table for German/European Games

Adj #	Adj Description	German 1 U.9 17	German 2 U.9 18	German 3 U.9 19	German 4 U.9 20	German 5 U.9 21	German 6 U.9 22
A.1 14	Replay Award	Credit	Ticket	Audit	Credit	Ticket	Audit
A.1 15	Special Award	Credit	Ex. Ball	Points	Credit	Ex. Ball	Points
A.1 16	Match Award	Credit	Ticket	Credit	Credit	Ticket	Credit
A.1 19	Match Feature	7 %	7 %	Off	7 %	7 %	Off
A.3 01	Game Pricing	6 spiele/5 DM	6 spiele/5 DM	6 spiele/5 DM	7 spiele/5 DM	7 spiele/5 DM	7 spiele/5 DM
A.4 02	H.S.T.D. Award	Credit	Ticket	Credit	Credit	Ticket	Credit
A.4 04	Champion Credits	03	03	00	03	03	00
A.4 05	High Score 1 Credits	01	01	00	01	01	00
A.4 06	High Score 2 Credits	00	00	00	00	00	00
A.4 07	High Score 3 Credits	00	00	00	00	00	00
A.4 08	High Score 4 Credits	00	00	00	00	00	00
A.4 10	Backup Champion			00			00
A.4 11	Backup High Score 1			00			00
A.4 12	Backup High Score 2			00			00
A.4 13	Backup High Score 3			00			00
A.4 14	Backup High Score 4			00			00

U.9 23 **Install French 1*** ***For French Jumpered CPU Boards only.**
The operator uses this adjustment to modify the game pricing and the type of game play. The Preset Game Adjustments Table for French Games lists the adjustments and setting that comprise the 'Install French 1' Group.

U.9 24 **Install French 2***
The operator uses this adjustment to modify the game pricing and the type of game play. The Preset Game Adjustments Table for French Games list the adjustments and settings that comprise the 'Install French 2' Group.

U.9 25 **Install French 3***
The operator uses this adjustment to modify the game pricing and the type of game play. The Preset Game Adjustments Table for French Games list the adjustments and settings that comprise the 'Install French 3' Group.

U.9 26 **Install French 4***
The operator uses this adjustment to modify the game pricing and the type of game play. The Preset Game Adjustments Table for French Games lists the adjustments and setting that comprise the 'Install French 4' Group.

U.9 27 **Install French 5***
The operator uses this adjustment to modify the game pricing and the type of game play. The Preset Game Adjustments Table for French Games lists the adjustments and settings that comprise the 'Install French 5' Group.

U.9 28 **Install French 6***
The operator uses this adjustment to modify the game pricing and the type of game play. The Preset Game Adjustments Table for French Games lists the adjustments and settings that comprise the 'Install French 6' Group.

Preset Game Adjustments Table for French Games

Adj #	Adj Description	French 1 U.9 23	French 2 U.9 24	French 3 U.9 25	French 4 U.9 26	French 5 U.9 27	French 6 U.9 28
U.9 06	Install 5 Ball	N/A	N/A	N/A	N/A	N/A	Yes

Press the Escape button to return to the Presets menu. Then press the Up button to display the next utility, (or the Down button to return to a previous utility).

U.10 Clear Credits

Press the Enter button to clear the game Credits. Press the Up button to display the next utility.

U.11 Auto Burn-in

Press the Enter button to activate Auto Burn-in. This utility allows you to automatically cycle through several tests. This helps in finding intermittent problems. The tests that Auto Burn-in cycles through are the Display Test, the Sound and Music Test, the All Lamps Test, the Solenoid Test, the Flashers Test, and the General Illumination Test.

Press the Escape button to return to the Utilities Menu. Then, either press the Up or Down button to return to a previous Utilities Menu Group, or press the Escape button again to return to the Main Menu. Once in the Main Menu either use the Up or Down buttons to return to a previous menu selection, or press the Escape button again to return to the Attract Mode.

PROBLEM ANALYSIS MESSAGES

The WPC game program has a great capability to aid the operator and service personnel: At Game Turn-on (and after pressing the Begin Test switch) once the game has been operating for an extended period, the player score displays may signal with a message, "Press ENTER for Test Report", that the game program has detected a possible problem with the game.

To obtain details of the problem, open the coin door and press the Begin Test switch. Press the Enter button to begin displaying the message(s). The following messages apply to your **Harley-Davidson** game.

Check Switch ##. This message indicates that at least one switch was stuck 'On' at game turn-on or has NOT been actuated during ball play (for 90 balls or ≈30 games) by displaying the message "Adjust Switch ##", listing each problem switch by number. (The game program compensates the game play requirements affected by each disabled switch to allow 'nearly normal' play. This helps keep **Harley-Davidson** earning, until the service technician can repair the problem, bringing the game back to its normal good profits!)

To verify the problem, refer to the Test Menu text describing Switch Testing, and check each reported switch using applicable switch tests. Always check switch operation using a ball, to simulate game conditions. (Switch problems may often be resolved by adjusting the wire switch actuators, fixing switch circuitry problems, securing loose connectors, etc. Mechanisms using 'opto switches' (drop targets, etc.) need to be checked for proper power connections (+12V dc and ground).

Pinball Missing. **Harley-Davidson** normally uses three balls; however, it will operate with one or two balls. This message announces that a ball is missing or stuck somewhere. When the ball is located, return it to the game via the Outhole. Other possibilities for this problem could be malfunctions of the Ball Trough switches or the Ball Shooter switch.

xxxxx Sw. is Stuck On. This message indicates that a switch, which is not usually On, remains in the On position after the game is switched On. The stuck switch is essential for game play (for example, a coin chute switch, the slam tilt switch, the plumb bob tilt switch), and should be cleared to permit proper game operation.

Ground Short Row-N, Wht-xxx. Frequent appearance of this message requires activation of the Switch Levels Test to locate the switch causing the "WHT-xxx ROW x SHORT" message. Possible 'row short' causes are: 1) Slam Tilt (or other coin door) switch touching the grounded coin door; 2) A *leaf-type,* playfield switch touching a grounded part; 3) Players poking metallic objects (wires, coat hangers, etc.) into the game; 4) Switch cable insulation pierced or damaged allowing bare wire contact with a grounded part; 5) All switches in a row closing at the same time (Note: This instance is NOT a switch problem; however, for most games this is a very rare possibility).

Factory Settings Restored. Repeated appearance of this message indicates that the CMOS RAM no longer retains any custom Pricing or Game Adjustment settings and has reverted to factory default settings. Generally, the following CPU checks will isolate the cause of the CMOS RAM memory failure. The voltage at pin 28 of U8 should be +5V (game turned On) and at least +3.8V (game turned Off). When the voltage drops below +3.8V, memory reset occurs. Check the batteries and battery holder. Be sure that the batteries are good and that there is no contamination on the battery holder terminals. Turn the game OFF, and use an ohmmeter to check diodes D1 and D2 on the CPU Board. D1 should read 0 ohms when forward-biased and infinite ohms when reverse-biased. D2 should read 15 ohms when forward-biased and infinite ohms when reverse-biased.

U6 Checksum Error. The game ROM checksum is invalid. If this occurs replace the game ROM.

Time and Date Not Set. The real time clock is not running. If this occurs go to U.4 of the Utilities Menu and set the time and date.

The CPU has three L.E.D.s located on the upper left side of the board. On game power-up the top and bottom L.E.D.s turn On for a moment then, the top L.E.D. turns Off and the center L.E.D. starts to blink rapidly. The bottom L.E.D. remains On. The system has detected a problem if the following happens:

CPU Board L.E.D. Error Codes

Center L.E.D. blinks one time	-	ROM Error U6
Center L.E.D. blinks two times	-	RAM Error U8
Center L.E.D. blinks three times	-	Custom Chip Failure U9

MAINTENANCE INFORMATION

Regular maintenance is essential to a game's continuing contribution to the operator's earnings.

LUBRICATION

The two main lubrication points of the Ball Shooter Lane Feeder mechanism are the pivots for the arm. Note that the mechanism of other playfield devices are somewhat similar to the Ball Shooter Lane Feeder Device; and have the same lubrication requirements as the Ball Shooter Lane Feeder Device. A medium viscosity oil (20W or 30W) is satisfactory for these devices.

Because of the functional design (arm-actuated via solenoid plunger operation), the pivot points of the Left and Right Kickers ("Slingshots") all require lubrication as a regular servicing procedure.

Lubrication to ensure proper operation also applies to the target blades of the Drop Targets. MBI Instrument Grease, also known as Drop Target Switch Lubricant, with a Williams' part number of 20-8886, is a recommended lubricant.

SWITCH CONTACTS

For proper game operation, switch contacts should be free of dust, dirt, contamination, and corrosion. Blade switch contacts are plated to resist corrosion. Cleaning blade switch contacts requires gentle closing of the contacts on a clean business card or piece of paper, and then pulling the paper about 2 inches, which should restore the clean contact surface. Adjust the switch contacts to a 1/16-inch gap.

CLEANING

Good game action and extended playfield life are the results of regular playfield cleaning. During each collection stop, the playfield glass should be removed and thoroughly cleaned and the playfield should be wiped off with a clean, lint-free cloth. The game balls should be cleaned and inspected for any chips, nicks, or pits. Replace any damaged balls to prevent playfield damage.

Regular, more extensive, playfield cleaning is recommended. However, avoid excessive use of water and caustic or abrasive cleaners because they tend to damage the playfield surface. Playfield wax (or any carnauba based wax), or polish may be used sparingly, to prevent a buildup on the playfield surface. Do not use cleaners containing petroleum distillates on any playfield plastics because they may dissolve the plastic material or damage the artwork.

Fuse List

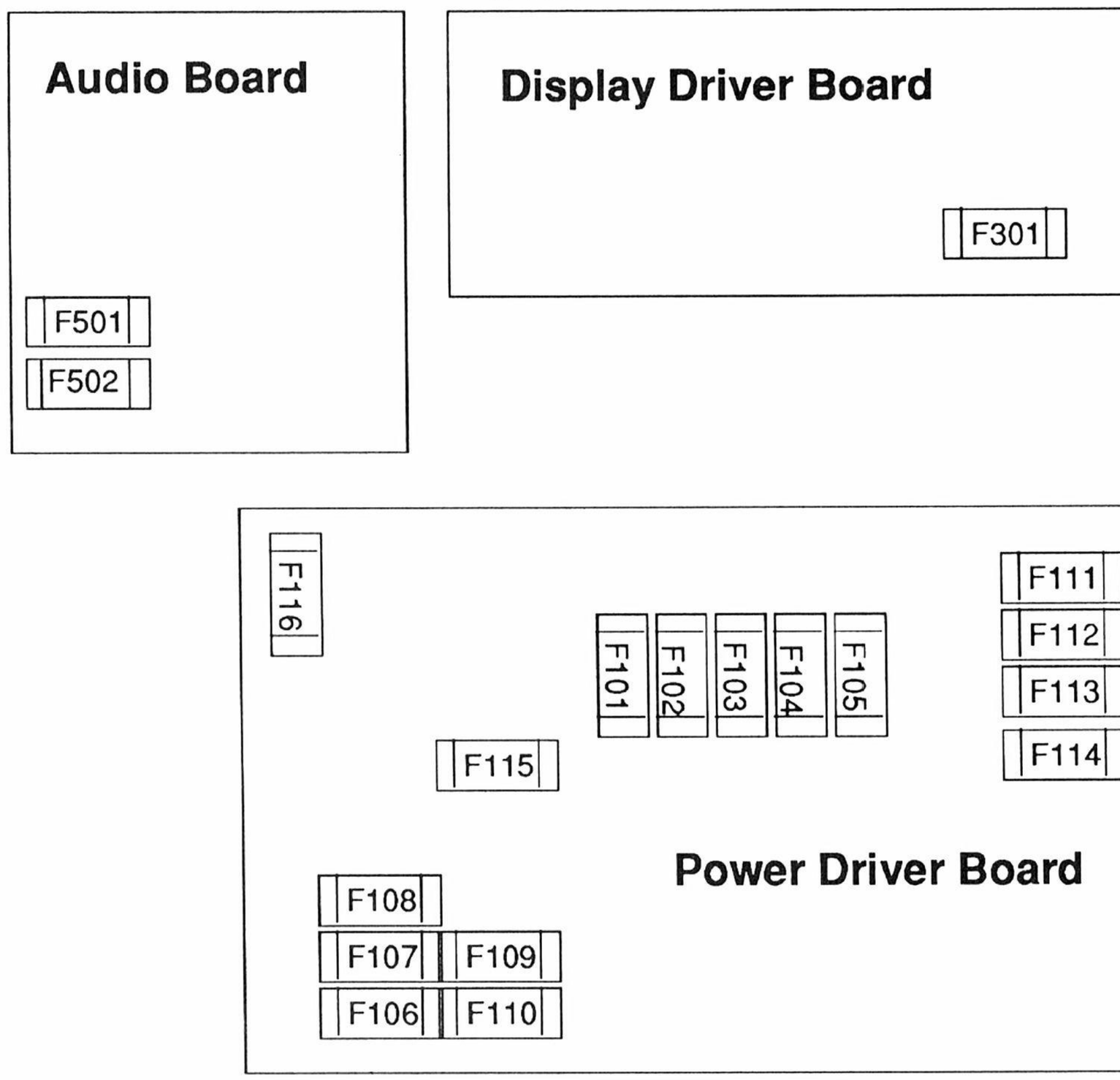

Audio Board

F501	-25V Circuit	3A, S.B.
F502	+25V Circuit	3A, S.B.

Display Driver Board

F301	±100V Circuit	3/8A, S.B.

Power Driver Board

F101	Left Flipper	2.5A, S.B.
F102	Right Flipper	2.5A, S.B.
F103	Solenoid 25-28	3A, S.B.
F104	Solenoids 9-16	3A, S.B.
F105	Solenoids 1-8	3A, S.B.
F106	G.I. #2 Wht-Vio	5A, S.B.
F107	G.I. #3 Wht-Yel	5A, S.B.
F108	G.I. #5 Wht-Grn	5A, S.B.
F109	G.I. #4 Wht-Orn	5A, S.B.
F110	G.I. #1 Wht-Brn	5A, S.B.
F111	Flasher Secondary	5A, S.B.
F112	Solenoid Secondary	5A, S.B.
F113	+5V Logic	5A, S.B.
F114	+18V Lamp Matrix	8A, N.B.
F115	+12V Switch Matrix	3/4A, S.B.
F116	+12V Secondary	3A, S.B.

Notes

Section 2
Game Parts Information

- ***Parts Lists & Diagrams***

Game Circuit Boards
Power Driver Board
Audio Board
CPU Board
Display Driver Board
Lamp Boards
High Current Driver Board
Coin Door Interface Board

Major Mechanism Assemblies
Solenoids/Flashers
Switches
Lamps
Playfield Parts

Location Diagram - Major Mechanism & Game Circuit Board

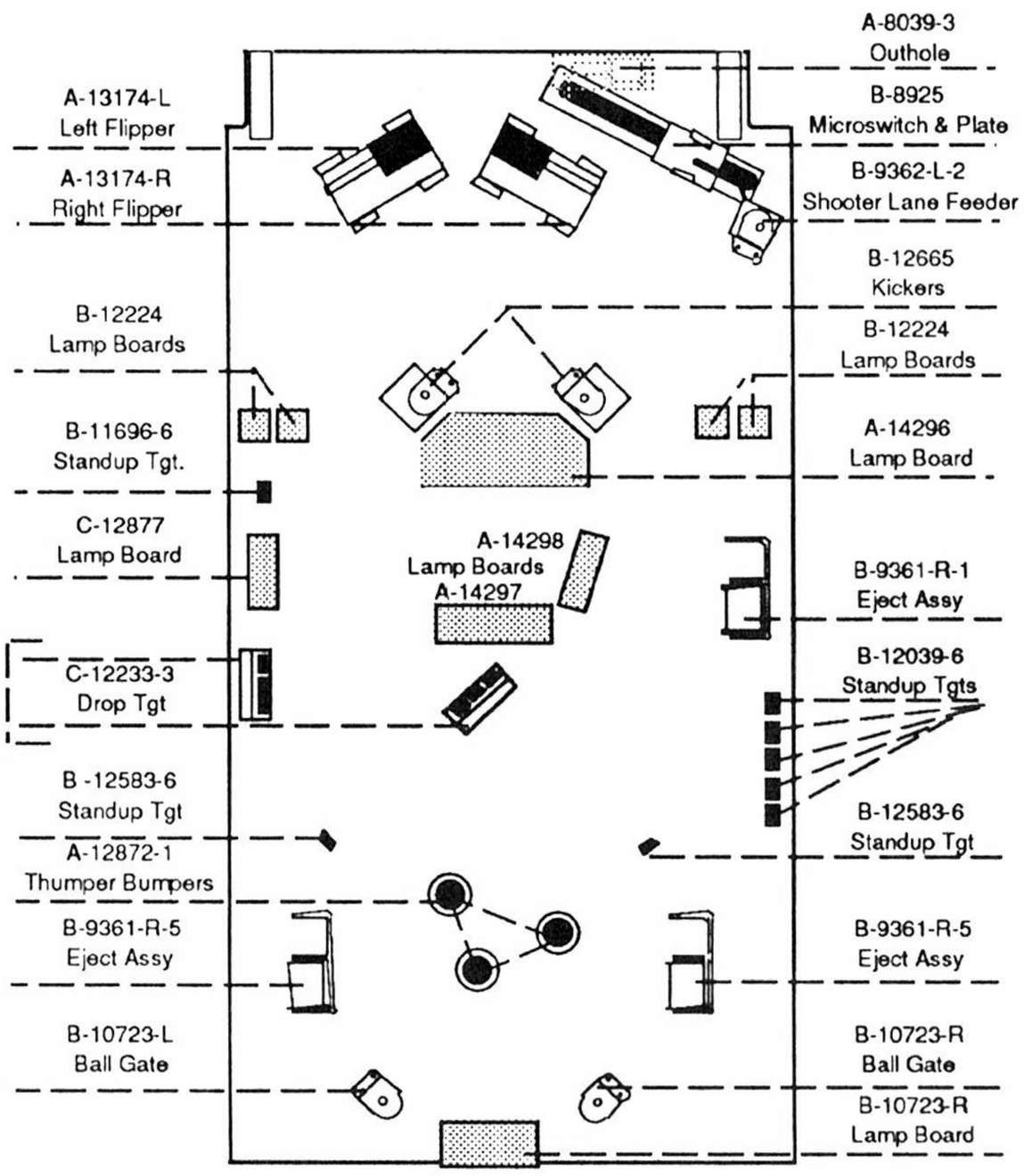

Under Side of Playfield, Viewed in Raised Position

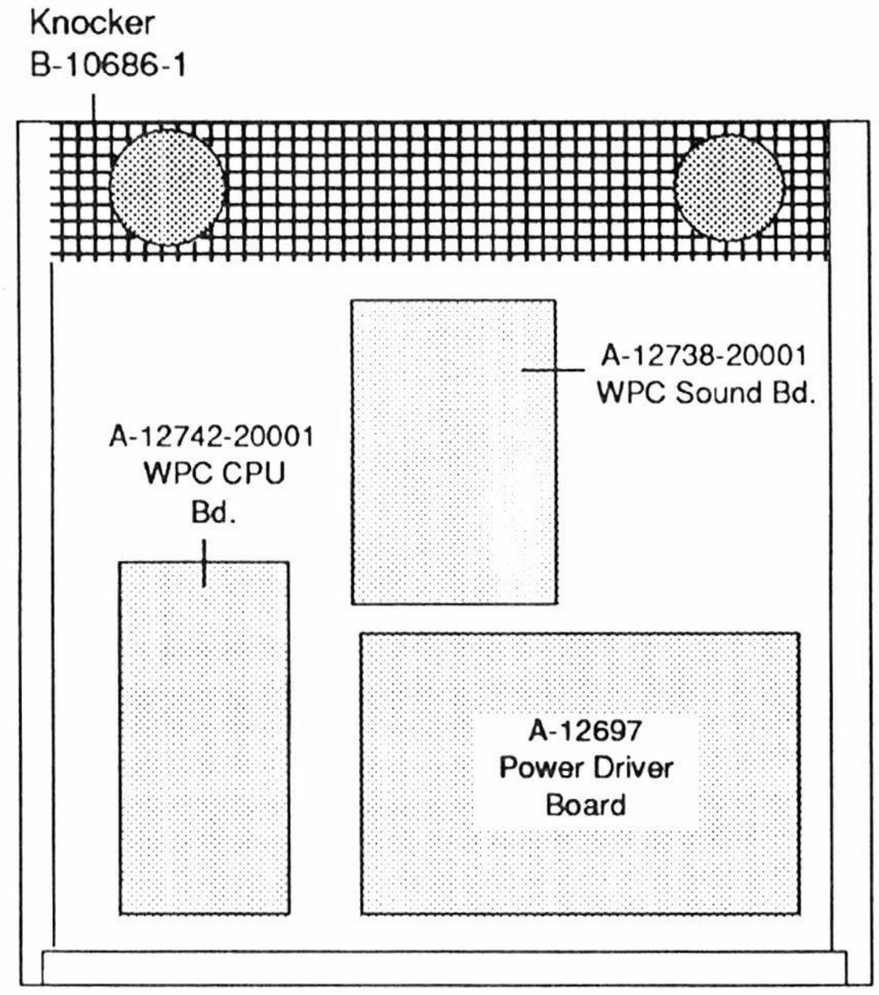

Backbox

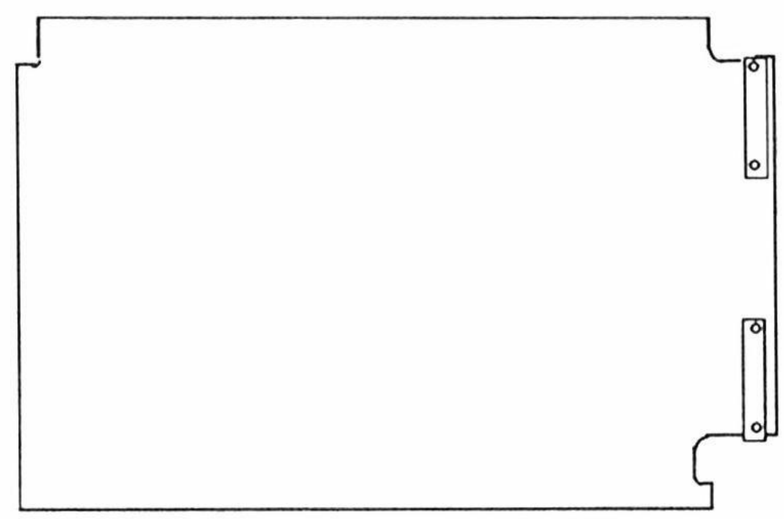

Insert Board, Inner Side View

WPC SYSTEM CIRCUIT BOARDS

Part Number	Description
A-12738-20001	Audio Board
A-12742-20001	WPC System CPU Board
A-12697	WPC Power Driver Board
A-12739-1	WPC Display Driver Board
A-12794	WPC Single Display Board
5555-12015-00	6", 20W Speaker
5555-12068-00	4", 50W Piezo Speaker

BACKBOX MECHANISMS & PARTS
(may not be shown in diagram)

Part Number	Description
B-10686-1	Knocker
20-9637	Backbox Lock

A-12738-20001 WPC Audio Board

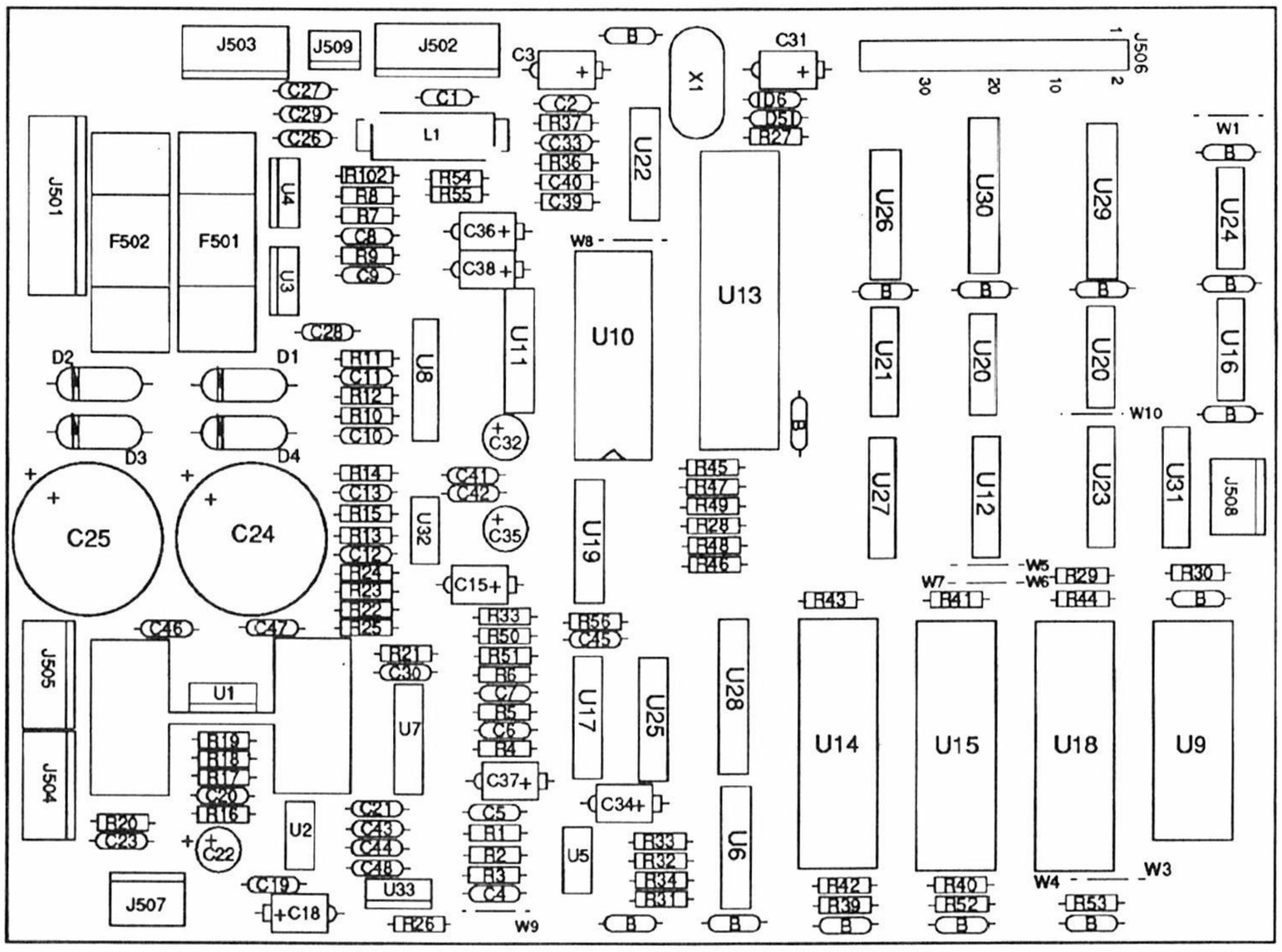

Part No.	Ckt Designator	Description
01-9980		Shield: Wire Protector
20-9229	U1	Thermal Compound
4004-01005-06	U1	Mach. Screw, 4-40 x 3/8
4104-01012-04	U1	Sh. Mach. Screw, #4 x 1/4
4104-01012-04	U1	Sh. Metal Screw, #4 x 1/4
4404-01119-00	U1	Nut, 4-40 SNUT
5010-09324-00	R21	Resistor 27K , 1/4w, 5%
5010-12065-00	R22, R25	Resistor, 120K , 1/4w, 5%
5010-08991-00	R51	Resistor, 4.7K , 1/4w, 5%
5010-08998-00	R36, R37	Resistor, 2.2K , 1/4w, 5%
5010-09034-00	R113, R14, R29-R31, R34, R50, R45-R49	Resistor, 10KΩ, 1/4w, 5%
5010-09035-00	R4	Resistor, 47KΩ, 1/4w, 5%
5010-09036-00	R35	Resistor, 100 , 1/4w, 5%
5010-09134-00	R1, R2, R8, R9, R11, R12, R23, R24	Resistor, 150K , 1/4w, 5%
5010-09162-00	R26, R27, R102	Resistor, 100K , 1/4w, 5%
5010-08774-00	R3, R5	Resistor, 22K, 1/4w, 5%
5010-09269-00	R15, R17, R19	Resistor, 12KΩ, 1/4w, 5%
5010-09358-00	R18, R32	Resistor, 1K , 1/4w, 5%
5010-09416-00	R28, R39, R40-R44 R52, R53	Resistor, 470 , 1/4w, 5%
5010-09534-00	W3, W5, W7-W10	Resistor, 0Ω
5010-10171-00	R38, R56	Resistor, 56Ω, 1/4w, 5%
5010-10258-00	R16	Resistor,, 1M, 1/4w, 5%
5010-10650-00	R7, R10	Resistor, 62K, 1/4w, 5%
5010-10989-00	R54, R55	Resistor, 470K, 1/4w, 5%
5010-12752-00	R20	Resistor, 1 , 1/4w, 5%
5040-08986-00	C3	Capacitor, 100M, 10v (±20%)
5040-09332-00	C15, C18, C34, C36, C38	Capacitor, 47µfd., 25v, Axial
5040-11036-00	C32, C35	Capacitor, 47µfd., 16v, Rad.
5040-12729-00	C24, C25	Capacitor, 4700µfd., 35v
5040-12750-00	C22	Capacitor, 22µfd., 35v, Rad.
5041-09031-00	C26-C29, C37, C46-C48	Capacitor, 1µfd. TANT
5041-09243-00	C20, C21	Capacitor, 10µfd. TANT
5043-08980-00	C41-C44, B(15)	Capacitor, .01M, 50v, (+80, -20)
5043-08996-00	C1, C2	Capacitor, .1µfd., 50v, 10%
5048-11027-00	C8, C10	Capacitor, 33pfd., 50v, 10%
5048-11028-00	C45	Capacitor, 22pfd., 50V, Axial
5048-11029-00	C33	Capacitor, 100pfd., 50v
5048-11030-00	C12	Caapacitor, 470pfd., 50v
5048-11031-00	C19, C31	Capacitor, .001µfd., 50v, 10%
5048-11065-00	C13	Capacitor, .0022µfd., 50v, 10%, Axial
5048-11072-00	C39, C40	Capacitor, .0033µfd.
5048-12036-00	C23	Capacitor, .22µfd., 10v, Ceramic
5048-12745-00	C4, C6	Capacitor, 1800pfd., 50V, 10%

Part No.	Ckt Designator	Description
5048-12746-00	C5, C7	Capacitor, 330pfd., 50V
5048-12748-00	C9, C11, C30	Capacitor, 220pfd., 50V
5070-08919-00	D5, D6	Diode, 1N4148
5070-09045-00	D1-D4	Diode MR501, 3.0A.
5250-10495-00	U3	Reg. 7912 1.0A -12v
5281-09215-00	U22	IC, 74LS04 Hex INV
5281-09246-00	U12	IC, 74LS139 2-4 Dec.
5281-09486-00	U28-U30	IC, 74LS374 8 Dual Flipflop
5281-09487-00	U6, U23-U25	IC, 74LS74 Dual Flipflop
5281-09500-00	U31	IC, 74LS32
5281-09745-00	U26, U27	IC, 74LS138 DMLTPX
5281-09850-00	U20	IC, 74LS11 Tripple AND
5281-10577-00	U16	IC, 74LS125 Q/B Bfr
5370-11086-00	U10	IC,, YM2151 Sound
5371-11087-00	U11	IC, YM3012 D/A
5400-10320-00	U13	IC, MPU 68B09E
5284-12651-00	U21	IC 4584
5340-12278-00	U9	S/Ram 2064
5370-09691-00	U17	IC, 55536 CVSD
5370-12260-00	U2	IC, 3340 Elec Atten
5370-12728-00	U1	IC, Audio Amp LM1875
5370-12730-00	U7, U8	IC, Op Amp TL084
5370-12742-00	U32	IC, Op Amp TL082
5371-12727-00	U19	Dac AD7524
5432-12726-00	U5	EE Prom Pot X9503
5460-12423-00	U4	IC, LM7812
5460-12743-00	U33	LM7809 TO-220
5520-09020-00	X1	Crystal, 3.58 MHz.
5521-10931-00	OSC1	Oscillator, 8.0 MHz.
5551-09822-00	L1	Ind, 4.7UH 3.0A.
5700-08985-00	U13	Socket, IC 40-pin, .6"
5700-09004-00	U9, U10	Socket, IC 24-pin, .6"
5700-09006-00	U11	Socket, IC 16-pin, .3"
A-5343-20001-2	U15	IC, Audio ROM
A-5343-20001-3	U18	IC, Audio ROM
5700-12088-00		Socket, IC 32-pin (U14, U15, U18)
5705-12755-00	U1	Heatsink 5299B-220
5731-08633-00	F501, F502	Fuse, 3A, S-B
5733-12060-01		Fuse Holder (F501, F502)
5766-12433-00		PCB-Sound 90
5791-10862-04	J503-J505	Connector, 4-pin Header Sq. .156
5791-10862-05	J502	Connector, 5-pin Header Sq. .156
5791-10862-07	J501	Connector, 7-pin Header Sq. .156
5791-12462-03	J509	Connector, 3-pin Header Sq. .100
5791-12462-04	J507, J508	Connector, 4-pin Header Sq. .100
5791-12516-00	J506	34 Hen 2x17 STR
16-8850-335		PCB Label

A-12742-20001 WPC CPU Board

Item	Part Number	Ckt Designator	Description
1	5010-09034-00	R14-R22, R27-R42, R86, R90, R94, R98	Resistor, 10K , 1/4w, 5%
2	5010-09085-00	R1, R2, R4, R93, R96, R97	Resistor, 1.5K , 1/4w, 5%
3	5010-09314-00	R52, R54, R56, R58, R60, R62, R64, R66, R75-R82	Resistor, 1.2K , 1/4w, 5%
4	5010-09358-00	R3, R43-R51, R53, R55, R57, R59, R61, R63, R65, R67-R74, R84	Resistor, 1K , 1/4w, 5%
5	5010-09416-00	R5-R8, R12, R13, R87-R89	Resistor, 470 , 1/4w, 5%
6	5010-09534-00	W2, W4, W7	Resistor, 0
7	5010-10258-00	R95, R99	Resistor, .01µfd , 1/4w, 5%
8	5010-10989-00	R92	Resistor, 470K , 1/4w, 5%
9	5010-12104-00	R91	Resistor, 22µfd, 1/4w, 5%
10	5019-09362-00	SIP 1	SIP, 9R, 10-pin, 4.7K , 5%
11	5040-08986-00	C31	Capacitor, 100µfd, 10v (±20%)
12	5043-08980-00	B	Capacitor, .01µfd, 50v, (+80, -20%)
13	5043-09030-00	C27	Capacitor, 0.047µfd, 50v (±20%)
14	5043-09065-00	C3 - C26	Capacitor, 470pfd, 50v (±20%)
15	5043-09491-00	C2, C29, C30, C34	Capacitor, 22pfd, 1KV, (±10%)
16	5043-09492-00	C28	Capacitor, 100pfd, 50v, (±10%)
17	5043-09845-00	C32, C33	Capacitor, 1KP, 50v, (±20%)
18	5070-08919-00	D2 - D18	Diode, 1N4148, 150MA
19	5070-09266-00	D1, D25	Diode, 1N5817, 1.0A.
20	5160-10269-00	Q1	Transistor, 2N3904, NPN
21	5162-12422-00	U20	IC, ULN, 2803A
22	5281-09308-00	U3	IC, 74LS245, Octal Bus Trncv
23	5281-09486-00	U14	IC, 74LS374, 8D F/F
24	5281-09851-00	U5	IC, 74LS14, SMT/TRG
25	5281-09867-00	U1, U2, U7	IC, Octal Buffer, 74LS244
26	5281-10182-00	U11, U12, U13, U15	IC, 74LS240 Driver
27	5284-12651-00	U21	IC, 4584
28	5340-12278-00	U8	S/RAM 2064
29	5370-12272-00	U16 - U19	IC, LM339, Quad. Comp
30	5370-12687-00	U10	MC, 34064 Reset Chip
31	5520-10438-00	X2	Crystal, 8.0MHz.
32	5520-12084-00	X1	Crystal 32.768 KHz
33	5551-09822-00	L1	ILN, 4.7 UH 3A
34	5671-09019-00	D19 - D21	DSPL LED RED
35	5700-08985-00	U4	Socket, IC 40P, .6"
36	5700-12088-00	U6	Socket, IC 32P, .6"
37	5700-12424-00	U9	Socket, 84 Pin PLCC
38	5764-12431-00		PC Board
39	5791-10850-00	J201, J204	Connector, 26-pin Header Str Sq.
40	5791-10862-07	J210	Connector, 7-pin Header Str Sq.
41	5791-12461-08	J212	Connector, 8-pin Header Str Sq.
42	5791-12461-09	J206 - J209	Connector, 9-pin Header Sq. pin
43	5791-12461-12	J205	Connector, 12-pin Header Sq. pin
44	5791-12516-00	J202, J211	34 Hen 2x17 STR
45	5881-09021-00	B1 - B3	Battery Holder "AA"
46	5048-11033-00	C50	Capacitor, 0.022µf, 10v
47	16-8850-319		PCB Label
48	A-5343-20001-1	U6	Game EPROM Assembly
49	5410-12426-00	U9	WPC-89 ASIC
50	5400-10320-00	U4	IC MPU 68B09E
51	5880-09022-00	B1 - B3	Battery, Alkaline, 1.5v ("AA")

A-12742-20001 WPC CPU Board

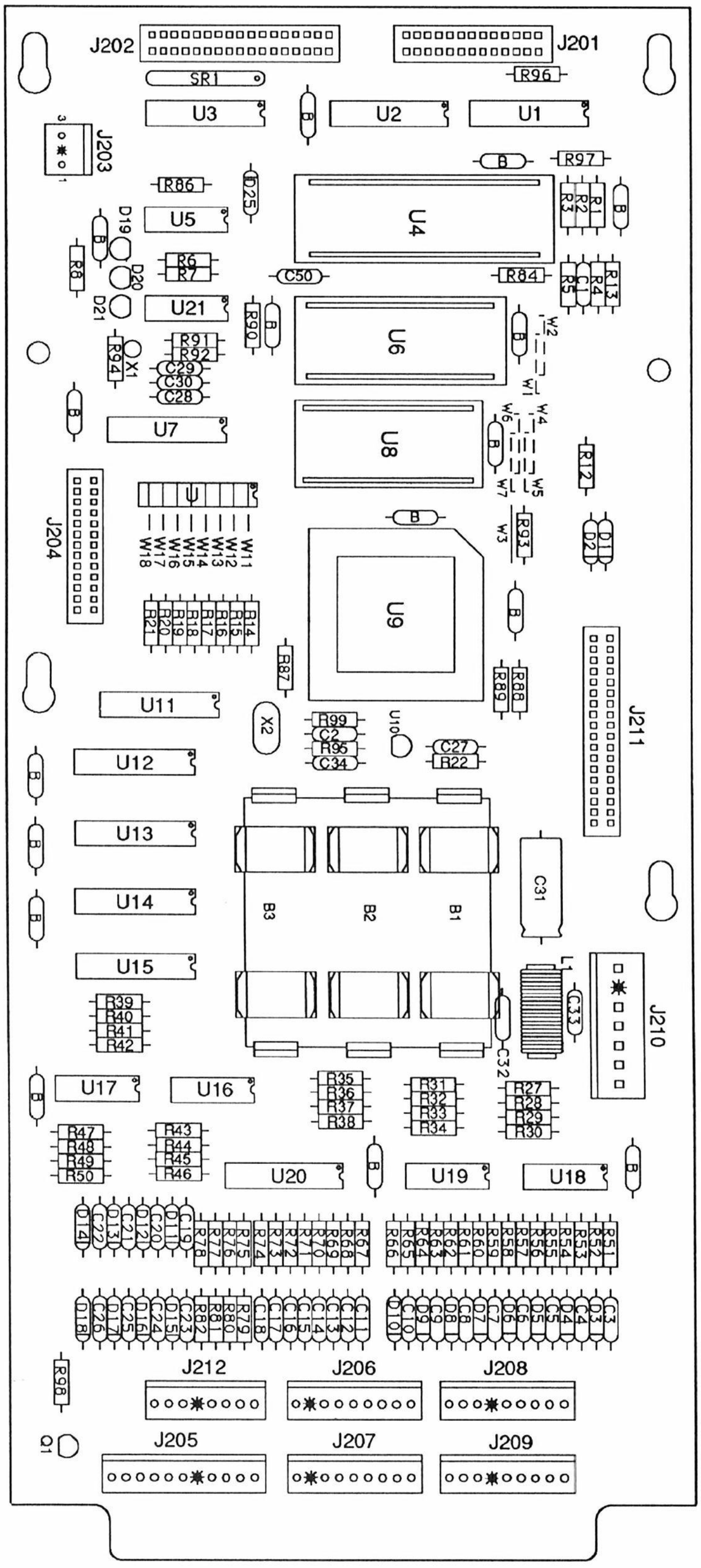

A-12697-1 WPC Power Driver Assembly

Item	Part Number	Ckt Designator	Description
1	20-9229	Q2, Q10, Q12, Q14, Q16, Q18	Thermal Compound
2	4006-01003-06	Q1, Q2, Q10, Q12, Q14, Q16, Q18	Mach. Screw, 6-32 x 3/8
3	4406-01128-00	Q1, Q2, Q10, Q12, Q14, Q16, Q18	Nut, 6-32 KEPS
4	4004-01005-06	Q10, Q12, Q14, Q16, Q18	Mach. Screw, 4-40 x 3/8
5	4404-01119-00	Q10, Q12, Q14, Q16, Q18	Nut, 4-40 SNUT
6	5010-08981-00	R260	Resistor, 10KΩ, 1/2w, 5%
7	5010-08991-00	R9, R12, R15, R18, R21, R23, R27, R31. R35, R39, R43, R47, R51, R55, R59, R63, R67, R71, R75, R79, R83, R87, R91, R95, R99, R126, R128, R130, R132, R134, R136, R138, R140, R209, R227	Resistor, 4.7KΩ, 14w, 5%
8	5010-08992-00	R8, R11, R14, R17, R20, R177, R179, R181, R183, R185, R187, R189, R191, R208	Resistor, 560 , 1/4w, 5%
9	5010-08993-00	R25, R29, R33, R37, R41, R45, R49, R53, R57, R61, R65, R69, R73, R77, R81, R85, R89, R93, R97, R101, R103, R106, R109, R112, R115, R118, R121, R124	Resistor, 68Ω, 1/4w, 5%
10	5010-08997-00	R24, R28, R32, R36, R40, R44, R48, R52, R56, R60, R64, R68, R72, R76, R80, R84, R88, R92, R96, R100, R102, R105, R108, R111, R114, R117, R120, R123, R195	Resistor, 2.7K , 1/4w, 5%
11	5010-08998-00	R155, R157, R159, R161, R165, R167, R169, R171	Resistor, 2.2K , 1/4w, 5%
12	5010-09034-00	R3, R4, R6, R142-R149, R197-R198, R202-R205	Resistor, 10KΩ, 1/4w, 5%
13	5010-09085-00	R194, R196, R251, R253-R257	Resistor, 1.5K , 1/4w, 5%
14	5010-09086-00	R252	Resistor, 6.8K , 1/4w, 5%
15	5010-09224-00	R1, R2, R192, R201	Ressistor, 270 , 1/4w, 5%
16	5010-09314-00	R176, R178, R180, R182 R184, R186, R188, R190	Resistor, 1.2K , 1/4w, 5%
17	5010-09324-00	R206	Resistor, 27KΩ, 1/4w, 5%
18	5010-09358-00	R154, R156, R158, R160, R164, R166, R168, R170, R162, R193, R199, R200 R250	Resistor, 1K , 1/4w, 5%
19	5010-09361-00	R104, R107, R110, R113 R116, R119, R122, R125	Resistor, 220 , 1/4w, 5%
20	5010-09416-00	R22, R26, R30, R34, R38, R42, R46, R50, R54, R58, R62, R66, R70, R74, R78, R82, R86, R90, R94, R98, R127, R129, R131, R133, R135, R137, R139, R141	Resistor, 470 , 1/4w, 5%
21	5010-09534-00	W1, W2	Resistor, 0Ω
22	5010-11079-00	R7, R10, R13, R16, R19	Resistor, 51Ω, 1/4w, 5%
23	5010-12427-00	R150-R153, R172-R175	Resistor, .22 , 1w, 5%
24	5010-12632-00	R224	Resistor, .12Ω, 10w, 5%
25	5012-12238-00	R210, R211	Resistor, 3.3KΩ, 5w, 10%
26	5019-10143-00	SR1	SIP, 9R, 10 pin, 470 , 5%
27	5040-08986-00	C4	Capacitor, 100µfd, 10v (±20%)
28	5040-09421-00	C2	Capacitor, 100µfd, 25v (+50, -10%)
29	5040-09537-00	C8	Capacitor, 100µfd, 100v (±20%)
30	5040-12313-00	C5, C6, C7, C11, C30	Capacitor, 15,000µfd, 25v (±20%)
31	5043-08980-00	B-BYPASS	Capacitor, .01µfd, 50v (+80, -20%)
32	5043-08996-00	C13-C20, C31	Capacitor, .1µfd, 50v (±20%)
33	5043-09845-00	C1, C12	Capacitor, 1,000pfd, 50v (±20%)
34	5048-10994-00	C3	Capacitor, .33µfd, 50v (±20%) Ax.
35	5070-08919-00	D33, D34	Diode, 1N4148, 150MA.
36	5070-09054-00	D1-D3, D5-D12, D17-D32, D38, D39	Diode, 1N4004, 1.0A.
37	5100-09690-00	BR3-BR5	Bridge Rectifier, 35A., 200v
38	5131-12725-00	Q10, Q12, Q14, Q16, Q18	Triac, BT138E
39	5162-12422-00	U19	IC, ULN 2803
40	5162-12635-00	Q20, Q22, Q24, Q26, Q28 Q30, Q32, Q34, Q36, Q38, Q40, Q42, Q44, Q46, Q48, Q50, Q52, Q54, Q56, Q58, Q63, Q65, Q67, Q69, Q75, Q77, Q79, Q81, Q83 - Q90	Transistor, TIP 102
41	5190-09016-00	Q9, Q11, Q13, Q15, Q17, Q19, Q21, Q23, Q25, Q27, Q29, Q31, Q33, Q35, Q37, Q39, Q41, Q43, Q45, Q47, Q49, Q51, Q53, Q55, Q57, Q59-Q62, Q71-Q74, Q99	Transistor, 2N4403 PNP
42	5191-12179-00	Q64, Q66, Q68, Q70, Q76 Q78, Q80, Q82	Transistor, TIP36C PNP
43	5192-12428-00	Q91-Q98	Transistor, TIP 107
44	5250-12634-00	Q1	Reg LM 323 5v
45	5281-09486-00	U1-U5, U18	IC, 74LS374 8 Dual D Flipflop
46	5281-09487-00	U10-U13	IC, 74LS74 Dual D flipflop
47	5281-10182-00	U9	IC, 74LS240, L/Drvr
48	5370-12272-00	U6, U15, U16	IC, LM339 Quad. Comp
49	5460-12423-00	Q2	IC, LM 7812
50	5490-10892-00	U7, U8	Opto Isolator, 4N25
51	5580-08994-01	RLY 1	Relay 4PDT 6VDC5A VS
52	5671-09019-00	LED1 - LED7	Diaplay LED Red
53	5701-09652-00	Q1	Thermal Pad TO-3
54	5705-09199-00	Q2	Heatsink, #6030B
55	A-13944	Bridge Assembly	WPC Heatsink Rectifier Assy
56	5705-12637-00	Q1	Heatsink 5054
57	5705-12638-00	Q10, Q12, Q14, Q16, Q18	Heatsink 5298B
58	5733-12060-01		Fuse Holder, F101-F116
59	5763-12405-00		Bare PCB
60	5791-10862-03	J108, J119, J136	Connector, 3-pin Header STR Sq.
61	5791-10862-04	J103, J116-J118	Connector, 4-pin Header STR Sq.
62	5791-10862-05	J112, J104-J106, J123, J124, J128, J129, J131, J132	Connector, 5-pin Header STR Sq.
63	5791-10862-06	J107	Connector, 6-pin Header STR Sq.
64	5791-10862-07	J101, J109, J114	Connector, 7-pin Header STR Sq.
65	5791-10862-09	J102, J110, J122, J125, J127, J130, J137, J138	Connector, 9-pin Header STR Sq.
66	5791-10862-11	J120, J121	Connector, 11-pin Header STR Sq.
67	5791-10862-12	J115	Connector, 12-pin Header STR Sq.
68	5791-10862-13	J126	Connector, 13-pin Header STR Sq.
69	5791-12461-05	J111	Connector, 5-pin Header STR Sq.
70	5791-12461-09	J133-J135	Connector, 9-pin Header STR Sq.
71	5791-12516-00	J102	34 HEN 2x17 STR
72	5824-09248-00	TP1-TP8	Test Point #1502-1
73	5041-09163-00	C9	Capacitor, 2.2µfd TANT
74-100	Not Used		
101	16-8850		ID Label
102	5730-09071-00	F114	Fuse, 8A, 32v
103	5731-09128-00	F101, F102	Fuse, S-B, 2.5A., 250v
104	Not Used		
105	5731-09651-00	F106-F113	Fuse, S-B, 5A., 250v
106	Not Used		
107	5731-10356-00	F103-F105, F116	Fuse, S-B, 3A., 250v
108	5730-09797-00	F115	Fuse, S-B, 3/4A., 250v

NOTE: For schematic refer to drawing #16-9057.

A-12697-1 WPC Power Driver Board

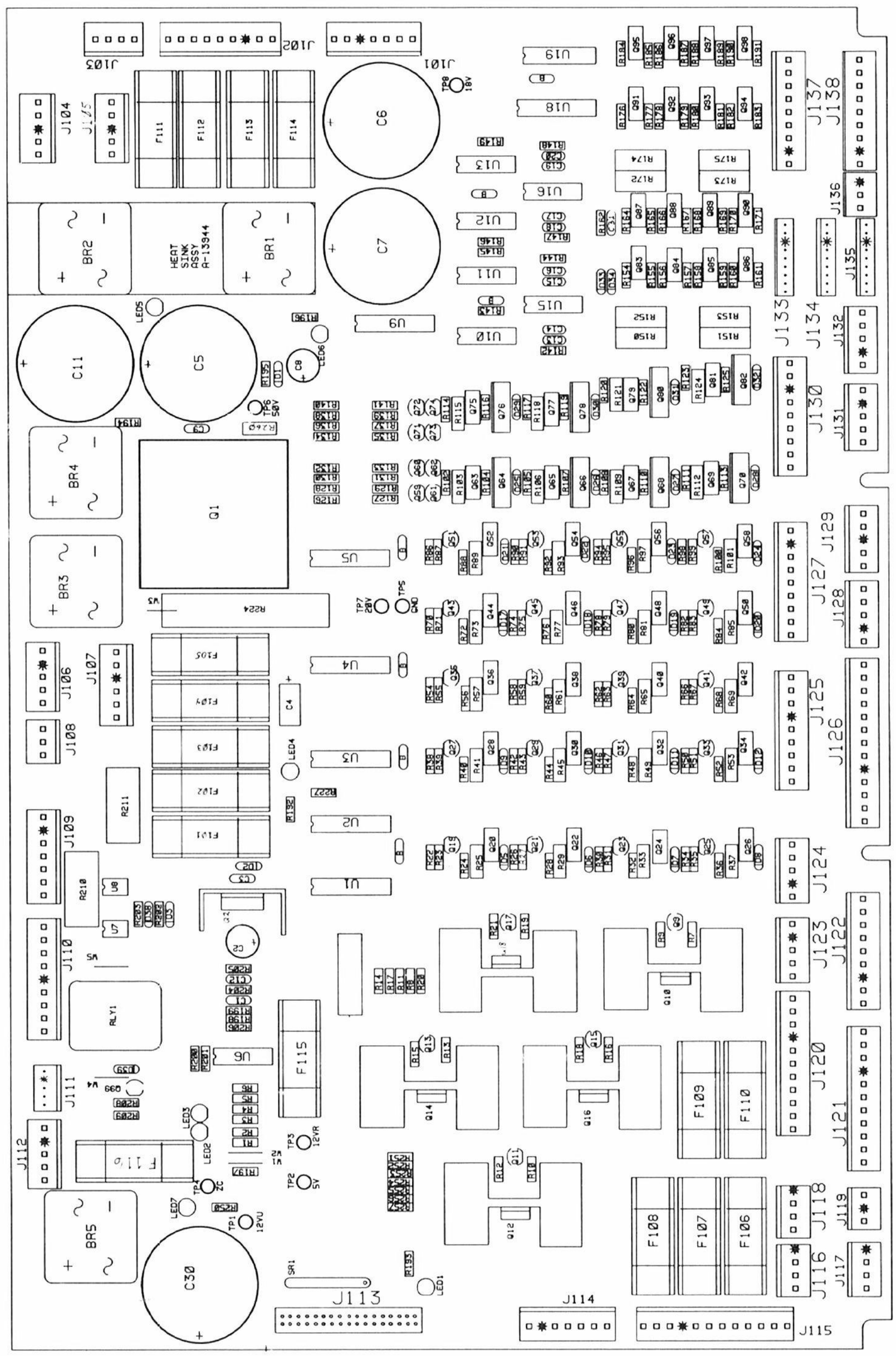

A-12739-1 WPC Display Driver Assembly

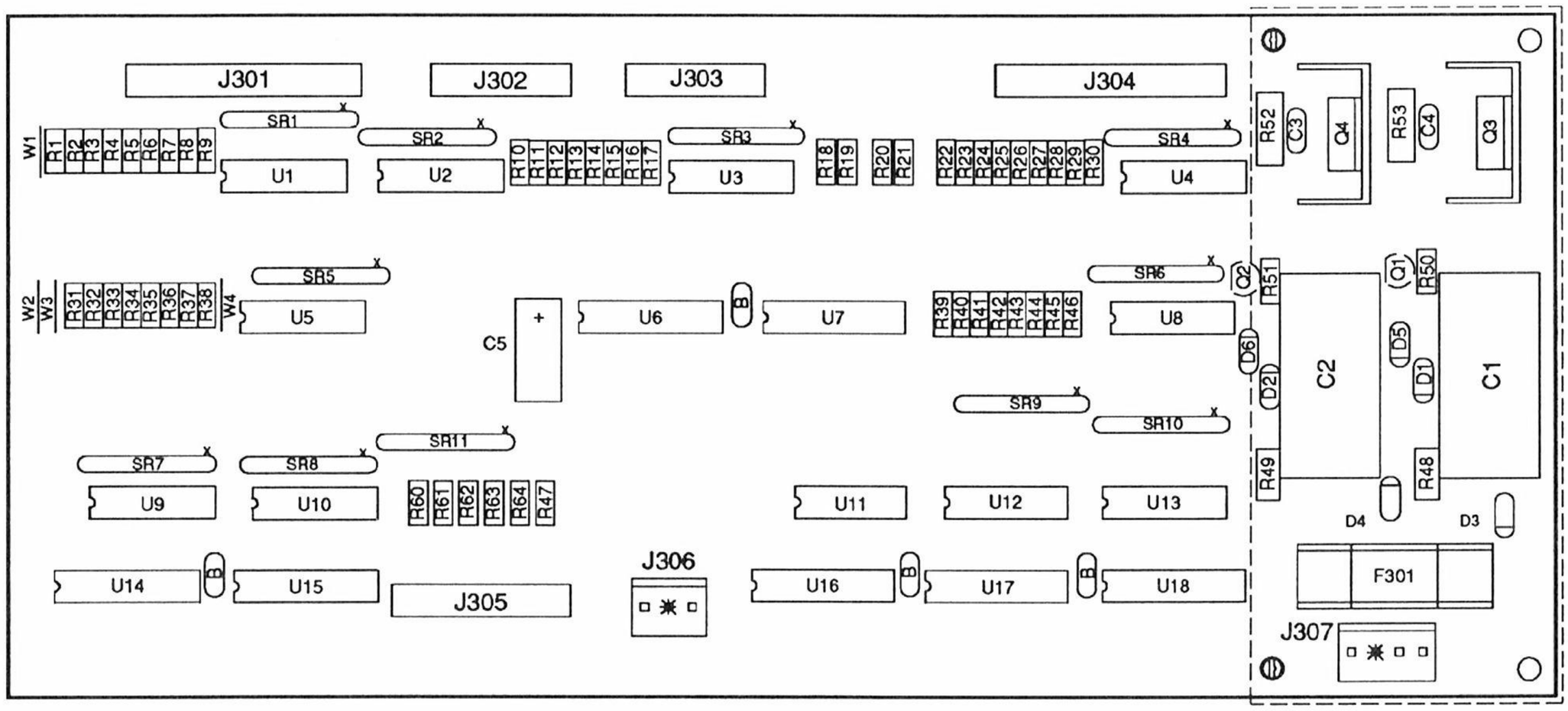

Part Number	Ckt Designator	Description
20-9229	Q3, Q4	Thermal Compound
4006-01003-06	Q3, Q4	Mach. Screw, 6-32 x 3/8
4406-01128-00	Q3, Q4	Nut, 6-32 KEPS
5010-08991-00	R47	Resistor, 4.7K , 1/4w, 5%
5010-09061-00	R50, R51	Resistor, 680 , 1/2w, 5%
5010-09069-00	R52, R53	Resistor, 330K , 1/2w, 5%
5010-09085-00	R60- R64	Resistor, 1.5K , 1/4w, 5%
5010-09536-00	R48, R49	Resistor, 39K , 1w, 5%
5010-10258-00	R3, R18 - R21, R24	Resistor, 1M , 1/4w, 5%
5010-08773-00	R4, R5, R25, R26,R33,R38, R41, R46	Resistor, 18K , 1/4w, 5%
5010-09034-00	R6, R27, R31, R34, R36, R39, R42, R44	Resistor, 10K , 1/4w, 5%
5010-09219-00	R1, R2, R7-R9, R22, R23, R28-R30, R32, R35, R37, R40, R43, R45	Resistor, 8.2K , 1/4w, 5%
5010-09534-00	W3, W4	Resistor, 0
5019-10143-00	SR11	SIP, 9R, 10-pin, 470 , 5%
5019-12509-00	SR1,SR4-SR10	SIP, 10R, 10-pin, 100K , 5%
5040-08986-00	C51	Capacitor, 100µfd, 10v, (±20%)
5040-12324-00	C1, C2	Capacitor, 150µfd, 160v, (±50%)

Part Number	Ckt Designator	Description
5043-08980-00	B	Capacitor, 0.01µfd, 50v, (+80, -20%)
5043-09072-00	C3, C4	Capacitor, 0.1µfd, 500v, (+80, -20%)
5070-09054-00	D3, D4	Diode, 1N4004, 1.0A.
5075-09059-00	D1, D2	Zener, 1N5990, 3.9v, 1/2w
5075-12650-00	D5, D6	Zener, 1N4763A, 91v, 1w
5164-09056-00	Q1	Transistor, MPSD02 NPN
5164-12154-00	Q4	Transistor, MJE15030 NPN
5194-09055-00	Q2	Transistor, MPSD52 PNP
5194-12155-00	Q3	Transistor, MJE15031 PNP
5281-09246-00	U11	IC, 2-4 Dec, 74LS139
5281-09486-00	U14 - U18	IC, Dual D Flipflop, 74LS374
5281-10182-00	U6, U7	IC, 74LS240 L/Driver
5680-08969-00	U9, U10, U12, U13	IC, 7180 Cathode Drive
5680-08968-00	U1, U4, U5, U8	IC, 6184 Anode Drive
5705-09199-00	Q3, Q4	Heatsink, #6030B
5731-12328-00	F301	Fuse, 3/8A., S-B, 250v
5733-12060-01		Fuse Holder, F301
5764-12432-00	PCB	PCB Display Driver
5791-10850-00	J305	Connector, 26-pin STR Sq.
5791-10862-03	J306	Connector, 3-pin STR Sq.
5791-10862-04	J307	Connector, 4-pin STR Sq.
5791-12516-00	J301, J304	34 HEN 2x17 STR
03-8019-2		PCB Support Post
01-9967		Shield

Note: For Schematic refer to drawing #16-9059

A-12794 WPC Single Assembly

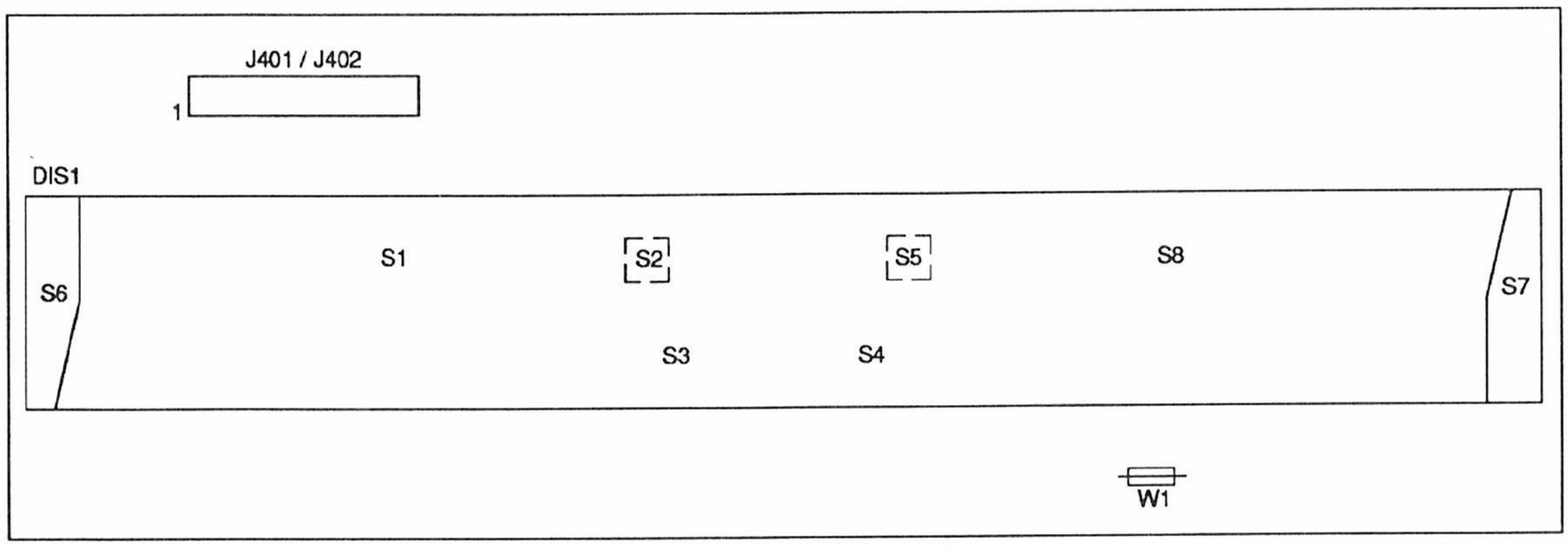

Part Number	Ckt Designator	Description
03-8329	S6, S7	Support 3/8"
03-8088-1	S2, S5	Retainer
5010-09534-00	W1	Resistor, 0
5760-12447-00	PCB	Bare PCB
5670-12308-00	DIS1	Alphanumeric Display Board
5791-12516-00	J401/J402	Connector, 34 Hen 2x17 STR
23-6655	M1, M2	Mask WPC Display

C-13509 High Current Driver Board

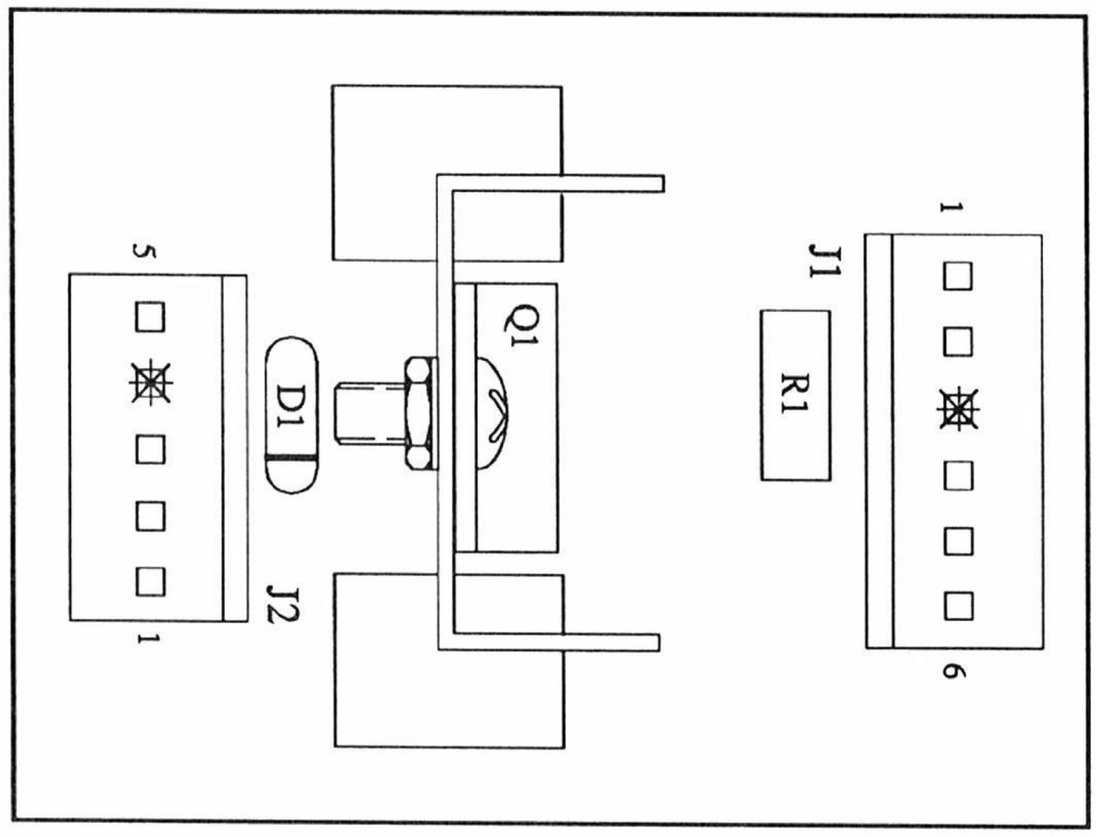

Part Number	Ckt Symbol	Description
5768-12609-00		Bare PC Board
4703-00015-00		Lockwasher, #4 External
4404-01117-00		Nut, 4-40 Hex.
4004-01005-00		MAchine Screw, 4-40 x 3/8
5705-09199-00		Heatsink
5010-09361-00	R1	Resistor, 220 , 1/2W, 5%
5070-09054-00	D1	Diode, 1N4004, 1.0A
5191-12179-00	Q1	Transistor, TIP36C PNP
5791-10862-05	J2	Connector, 5-pin header
5791-10862-06	J1	Connector, 6-pin header

Lamp Boards

B-12224 Single Lamp Board

Part Number	Description
5768-12312-00	Lamp PCB
24-8767	Twist Lamp Socket
24-8768	Bulb #555, (6.3v, 0.25A.)
5070-09054-00	Diode, 1N4004, 1.0A.

B-12156 Single Flashlamp Board

Part Number	Description
5768-12297-00	Lamp PCB
24-8803	Twist Lamp Socket
24-8802	Bulb #906, (13v, 0.69A.)

A-14296 10-Lamp Board

Part Number	Description
5768-12758-00	Lamp PCB
24-8767	Twist Lamp Socket
24-8768	Bulb #555, (6.3v, 0.25A.)
5070-09054-00	Diode, 1N4004, 1.0A.
5791-10871-08	Connector, 8-pin Header Sq Post
5010-09534-00	Resistor, 0 ohm

A-14297 4-Lamp Board

Part Number	Description
5768-12759-00	Lamp PCB
24-8767	Twist Lamp Socket
24-8768	Bulb #555, (6.3v, 0.25A.)
5070-09054-00	Diode, 1N4004, 1.0A
5791-10871-06	Connector, 6-pin Header Sq Post

A-14298 3-Lamp Board

Part Number	Description
5768-12760-00	Lamp PCB
24-8767	Twist Lamp Socket
24-8768	Bulb #555, (6.3v, 0.25A.)
5070-09054-00	Diode, 1N4004, 1.0A.
5791-10871-05	Connector, 5-pin Header Sq Post

A-14299 3-Lamp Board

Part Number	Description
5768-12761-00	Lamp PCB
24-8767	Twist Lamp Socket
24-8768	Bulb #555, (6.3v, 0.25A.)
5070-09054-00	Diode, 1N4004, 1.0A.
5791-10871-05	Connector, 5-pin Header Sq Post

A-14314 3-Lamp Board

Part Number	Description
5768-12766-00	Lamp PCB
24-8767	Twist Lamp Socket
24-8768	Bulb #555, (6.3v, 0.25A.)
5070-09054-00	Diode, 1N4004, 1.0A.
5791-10871-06	Connector, 6-pin Header Sq Post

C-12877 4-Lamp Board

Part Number	Description
5768-12452-00	Lamp PCB
24-8767	Twist Lamp Socket
24-8768	Bulb #555, (6.3v, 0.25A.)
5070-09054-00	Diode, 1N4004, 1.0A.
5791-10871-06	Connector, 6-pin Header Sq Post

C-13365 Truck Lamp Board

Part Number	Description
5768-12587-00	Lamp PCB
24-8767	Twist Lamp Socket
24-8768	Bulb #555, (6.3V, 0.25A.)
5070-09054-00	Diode, 1N4004, 1.0A.
5791-10871-07	Connector, 7-pin Header Sq Post

A-14392
Spin Target Assembly

Part Number	Description
01-8341	Mounting Bracket
12-6780	Actuator Wire
31-1019-554	Screened Spin Target
31-1614-20001	Decal Spinner

A-14392-1
Spin Target Assembly

Part Number	Description
01-8341	Mounting Bracket
12-6780	Actuator Wire
31-1019-554	Screened Spin Target
31-1614-20001-1	Decal Spinner

Standup Target Assemblies

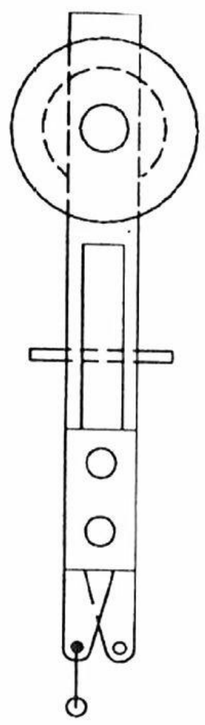

B-11696

B-11696-6
Round Standup Target

Part Number	Description
SW-1A-170-6	Standup Tgt. Switch
03-8093-6	Round Target, Yellow
5070-06258-00	Diode, 1N4001, 1.0A.

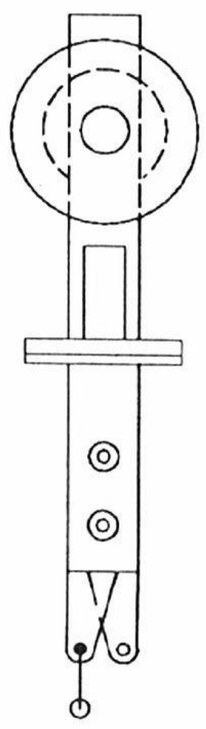

B-12039

B-12039-6
Round Standup Target

Part Number	Description
SW-1A-170-6	Standup Tgt. Switch
03-8093-6	Round Target, Yellow
5070-06258-00	Diode, 1N4001, 1.0A.

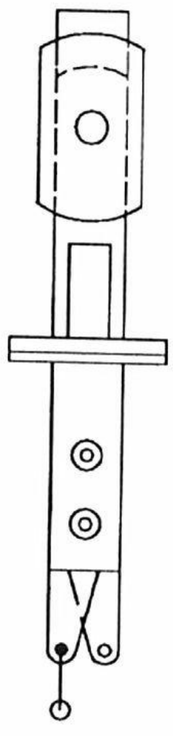

B-12583

B-12583-6
Oblong Standup Target

Part Number	Description
SW-1A-178-6	Standup Tgt. Switch
03-8225-6	Oblong Target, Yellow
5070-06258-00	Diode, 1N4001, 1.0A.

C-9638-3 Ball Shooter Lane Feeder

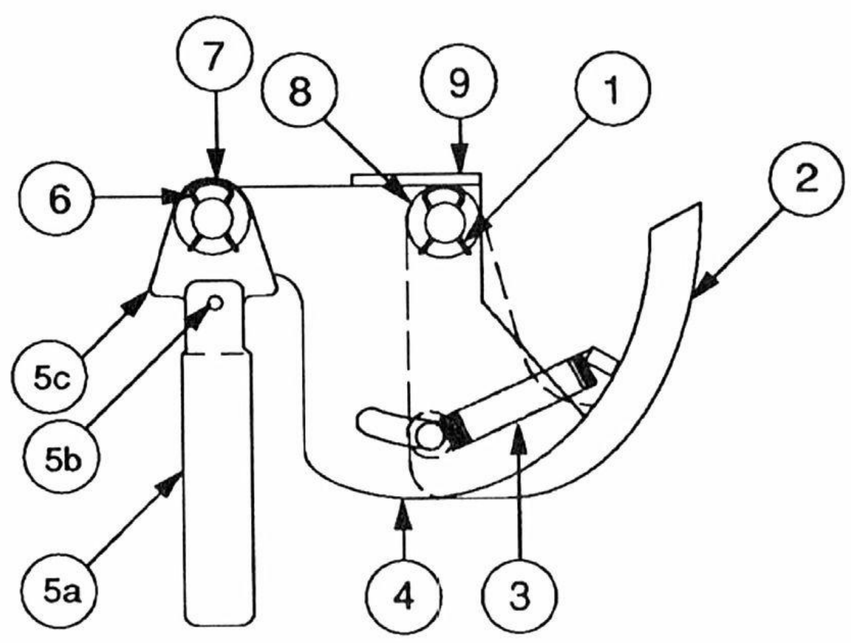

Item	Part Number	Description
1	12-6227	Hair Pin Clip
2	A-8247	Eject Cam Assembly
3	10-362	Ejector Spring (Plain)
4	A-6949-L	Spring Plate Assembly
5	A-8050-1	Coil Plunger Assy, 2-1/8"
a)	02-3407-2	Coil Plunger, 2-1/8"
b)	20-8716-5	Roll Pin, 1/8 x 7/16
c)	03-8085	Armature Link
6	12-6227	Hair Pin Clip
7	4700-00030-00	Flatwasher, 17/64 x1/2 x 15ga.
8	4700-00103-00	Flatwasher, 17/64 x1/2 x 28ga.
9	A-8268-2	Mounting Bracket Assembly

Associated Parts

B-9362-L-2	Coil & Bracket Assembly
B-7572-1	Bracket & Stop Assembly
01-8-508-S	Coil Retaining Bracket
4006-01017-06	Mach. Screw, 6-32 x 3/8
4406-01119-00	Nut, 6-32 ESN
AE-26-1200	Coil Assembly
03-7066	Coil Tubing

A-8039-3 Outhole Kicker Assembly

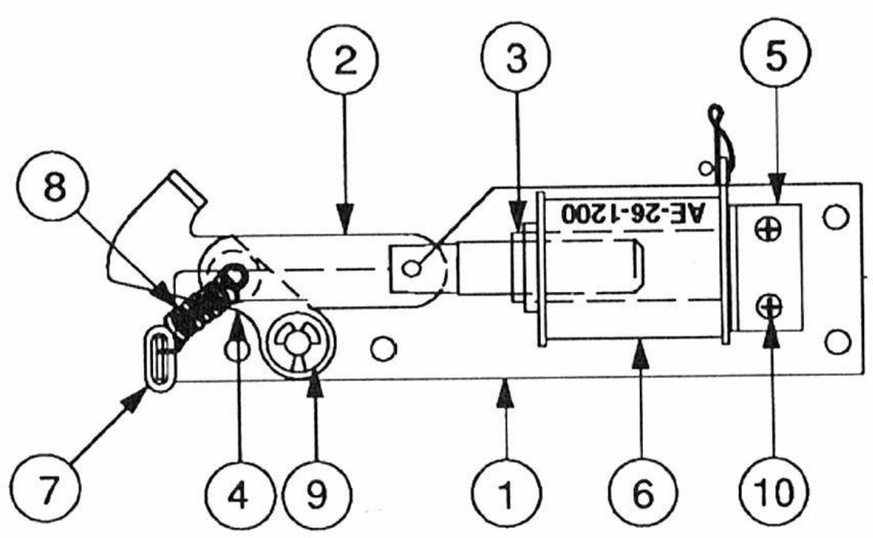

Item	Part Number	Description
1	A-6378	Mounting Plate Assembly
2	A-8335	Coil Plunger Assembly
a)	02-2364	Coil Plunger
b)	20-8716-5	Roll Pin, 1/8 x 7/16
c)	01-4251	Ball Return Link
3	03-7066	Coil Tubing
4	A-6889	Kicker Lever Assembly
5	A-8038	Coil Stop Assembly
6	AE-26-1200	Coil Assembly
7	03-7176-1	Striker Ring
8	10-101-4	Spring-Reset
9	20-8712-25	"E" Ring, 1/4" Shaft
10	4006-01003-03	Mach. Screw, 6-32 x 3/16

C-13174-R Right Flipper Assembly

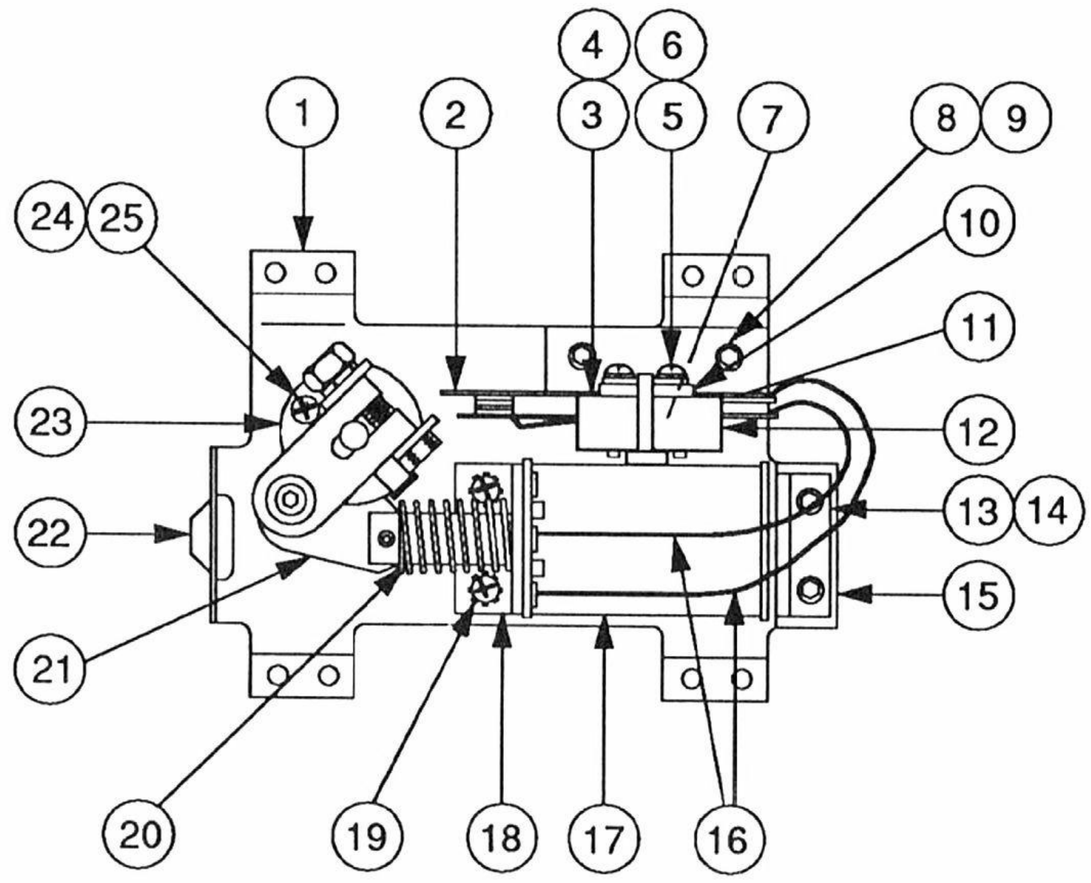

Item	Part Number	Description	Item	Part Number	Description
1	B-13104-R	Flipper Base Assy, R.	21	B-10655-R	Crank Link Assembly, Right
2	03-7811	End of Stroke (EOS) Sw	a)	02-4179	Link Spacer Bushing
3	RM-21-06	Sleeve, Vinyl (Cap. leads)	b)	4010-01086-14	Cap Screw, 10-32 x 7/8, SH
4	5045-12098-00	Capacitor, 2.2 µFd, 250V, 20%	c)	4700-00023-00	Flatwasher, 5/8 x 13/64 x 16ga.
5	4701-00002-00	Lockwasher, #6 Split	d)	4701-00004-00	Lockwasher, #10 Split
6	4105-01019-10	Sh. Metal Screw,#5 x 5/8	e)	4410-01132-00	Nut, 10-32 ESNA
7	23-6622	Tape, Double-sided	f)	A-10656*	Flipper Link Assembly
8	4008-01079-05	Cap Screw, 8-32 x 5/16	1.)	02-4219	Coil Plunger
9	4701-00003-00	Lockwasher, #8 Split	2.)	20-9370-1	Spring Pin, 5/32 dia. x 7/16
10	01-9375	Switch Mounting Bracket	3.)	03-8050-1	Flipper Link
11	03-7520-2	Ty-Wrap, Nylon	g)	B-10657-R	Flipper Crank Assy, R.
12	20-6516	Speednut, Tinnerman	1.)	01-8073-R	Flipper Crank, R.
13	4010-01066-06	Cap Screw, 10-32 x 3/8, SH	2.)	17-1037	Crank Washer
14	4701-00004-00	Lockwasher, #10 Split	3.)	4010-01066-18	Cap Screw,10-32 x 1-1/8
15	A-12111	Flipper Stop Assembly	4.)	4410-01127-00	Nut, 10-32 Hex Hd.
16	HW-30018-6	Wire, 18 AWG, Blue	5.)	4700-00107-00	Flatwasher, 5/8 x 13/64 x 12ga.
17	FL-11630	Flipper Coil (Red)	6.)	4701-00004-00	Lockwasher, #10 Split
18	01-7695	Solenoid Bracket	7.)	RM-23-06	Tubing, H. S. 1/4 DWP
19	4006-01017-04	Mach. Screw, 6-32 x 1/4	22	23-6577	Bumper Plug
20	10-376	Coil Plunger Spring	23	03-7568	Flipper Bushing
			24	4006-01005-06	Mach. Screw, 6-32 x 3/8
			25	4406-01117-00	Nut, 6-32 Hex.

Associated Parts:.

20-9250-6	Flipper Arm on Shaft (Yellow)
23-6519-4	Red Rubber Ring (Red)

Left Flipper Assembly

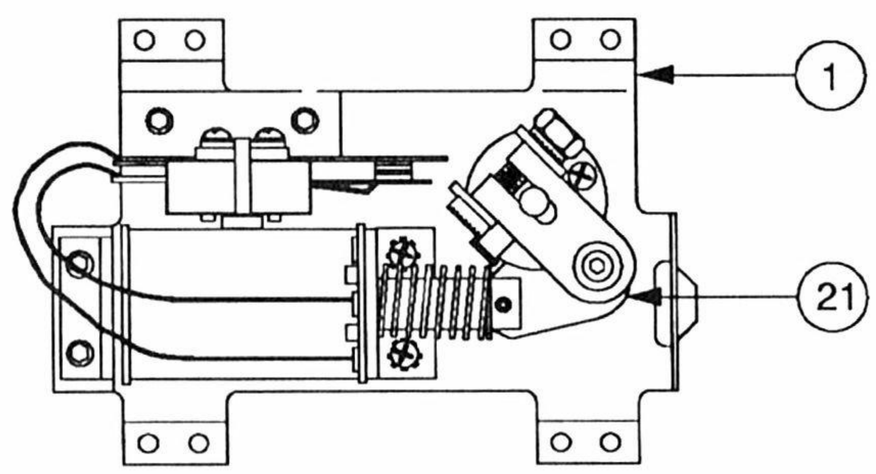

C-13174-L
Left Flipper Assembly

(Parts listed replace same items of **C-13174-R**)

Item	Part Number	Description
1	B-13104-L	Flipper Base Assembly, L
21	B-10655-L	Crank Link Assembly, L
g)	B-10657-L	Flipper Crank Assembly
1.)	01-8073-L	Flipper Crank, Left

Associated Parts:.		
	20-9250-6	Flipper Arm on Shaft (Yellow)
	23-6519-4	Red Rubber Ring (Red)

Flipper Assembly Notes...

1. Each Flipper Assembly on the Lower Playfield is mounted beneath the playfield, in conjunction with the plastic Flipper Paddle and Shaft (20-9250-6) and Flipper Rubber (23-6519-4) on the upper side of the playfield.
2. The tip of the EOS Switch must travel 0.150 (+ .010, - .000) inch, before the contacts fully open, with the flipper in the actuated position. The EOS Switch contacts must have a gap of 0.062 (± .015) inch. Adjustment of the EOS Switch must be made at a minimum distance of 0.25 inch from the switch body.
3. All moving elements of the assembly must operate freely, with no evidence of binding.
4. The large end of the Coil Plunger Spring (item 20) must fit within the four lugs of the Solenoid Bracket.
5. For coil replacement, remove the Solenoid Bracket (item 18) to prevent screw damage.
6. Use Loctite™ 242 when reattaching screws to the Flipper Stop Assembly, the Solenoid Bracket, and the Flipper Bushing.
7. When replacing their Bumper Plug (item 22) to restore proper flipper operation, readjust the flipper paddle and shaft position.
8. Solid-color blue wire connects to the banded end of each diode, mounted on the connector end of the Flipper Coil (item 17). Trace-color wire connects to the unbanded end of the diode.

A-12872-1 Thumper (jet) Bumper Assembly

The complete Thumper (jet) Bumper is not available as an assembly. The Thumper (jet) Bumper number is shown for reference purposes only. Order component parts individually, as shown in parts list.

Item	Part Number	Description
1	01-9117	Mounting Bracket
2	B-12749	Core Plug & Bracket Assy.
3	03-8324-5	Thunder Bumper Base, Wht.
4	03-6035-5	Thumper Bumper Wafer, Wht.
5	03-8325-5	Thumper Bumper Body
6	AE-26-1200	Coil Assembly
7	10-326	Compression Srping
8	A-4754	Flange & Stud Assembly
9	4008-01070-14	Machine Screw, 8-32
10	4408-01119-00	Nut, 8-32
11	4008-01015-04	PH. Pan, 8-32
12	4008-01015-06	PH. Pan, 8-32
13	4108-01001-10B	PH. Pan, 8 x 10, (black)
14	Not Used	
15	Not Used	
16	10-411	Compression Spring
17	01-9116	Thumper Bumper Bracket
18	01-9320	Plate
19	02-3406-1	Plunger
20	01-9319	Plunger Bracket
21	4705-00002-00	Spring-Washer
22	4406-01119-00	Nut, 6-32
23	Not Used	
24	Not Used	
25	01-9321	Plate
26	4005-01016-18B	Mach. Screw, 5-40 x 18, PH.RD.
27	01-9166	Plate
28	B-13267	Switch Assembly
29	03-7066	Coil Tubing (not shown)
30	A-14271	Thumper Bumper Light Socket Assembly

. . . . . .

Associated Parts

03-8277-12	Thumper Cap, Orange
03-8276-9	Collar (Red)

Thumper (jet) Bumper Assembly

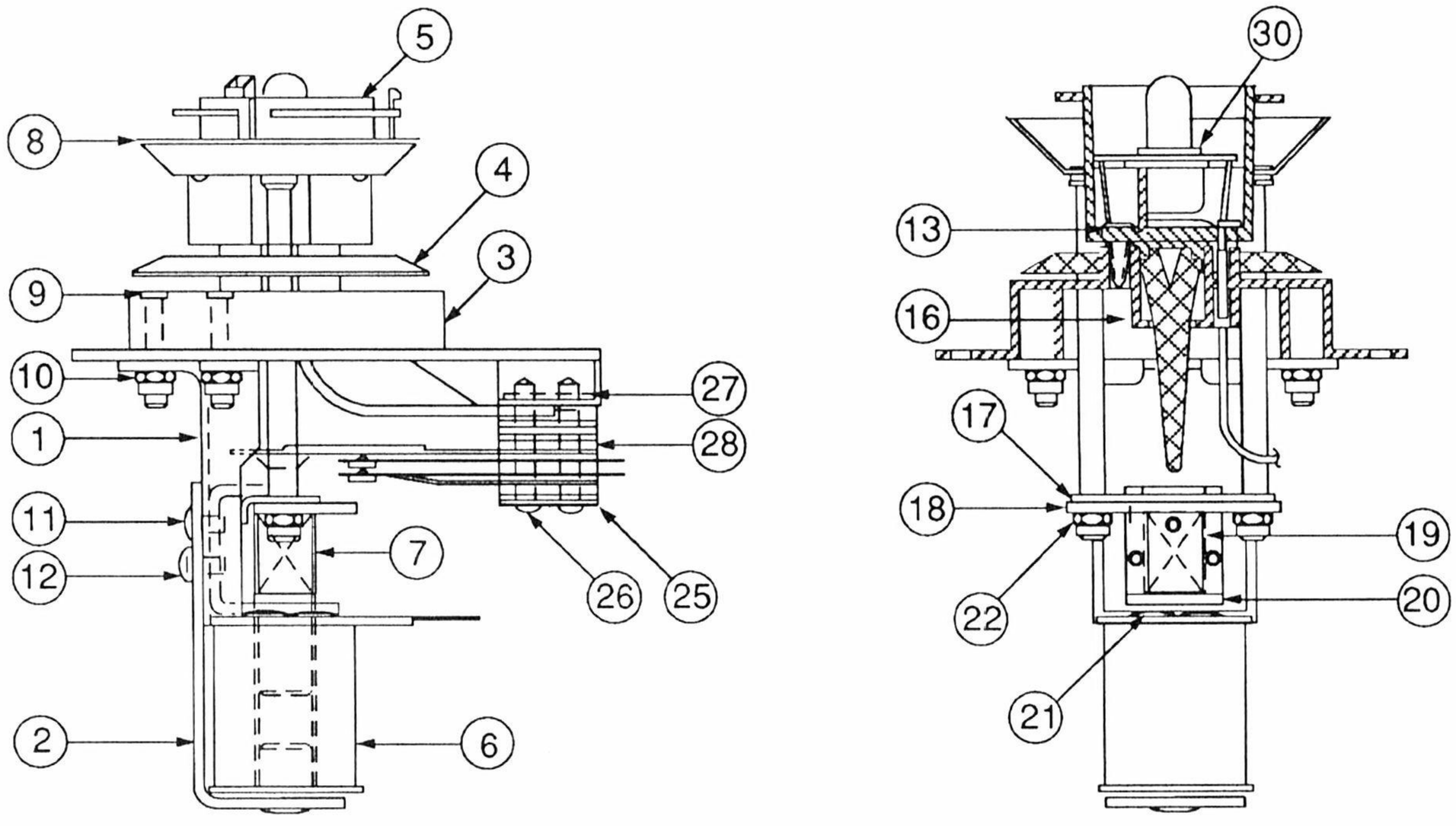

B-12665 Kicker Arm (Slingshot) Assembly

(Left & Right Kickers)

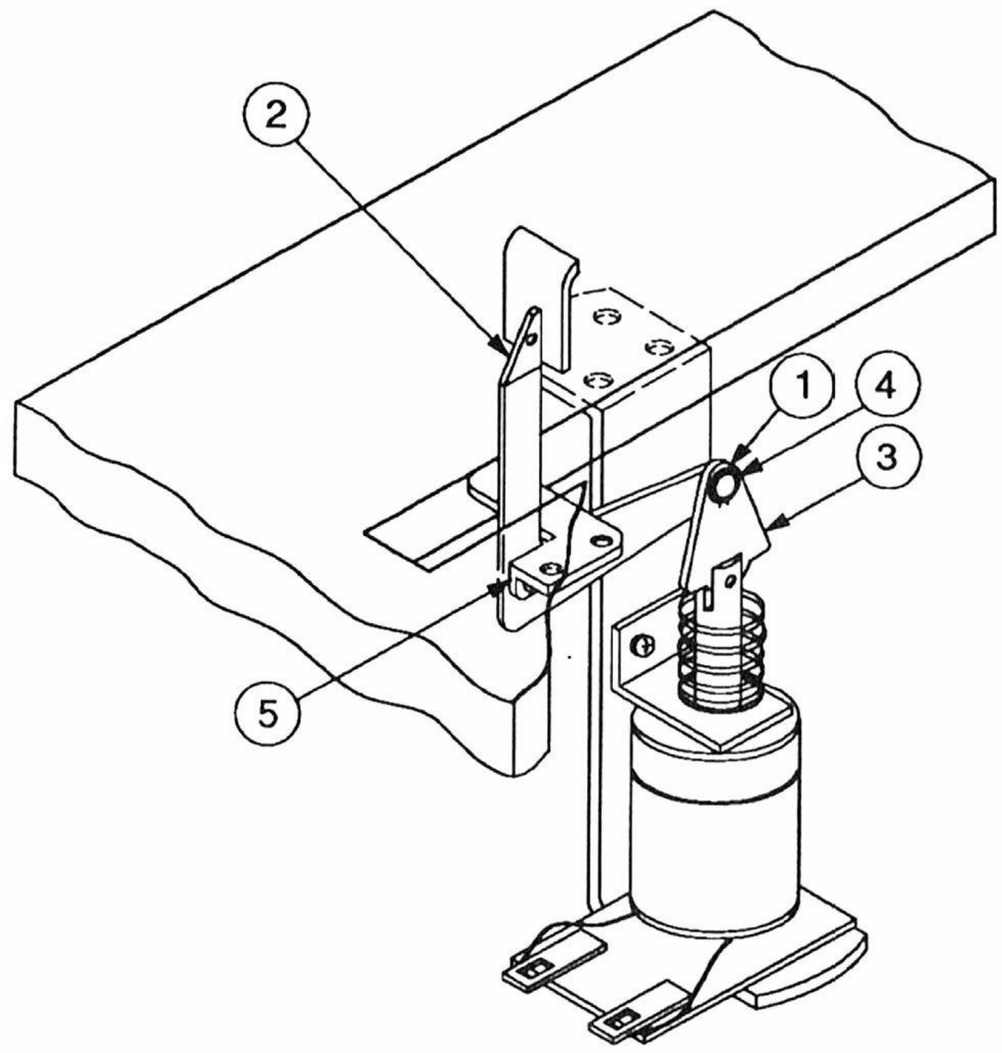

Item	Part Number	Description
1	12-6227	Clip, Hairpin
2	A-12664	Kicker Crank Assembly
3	A-5103	Coil Plunger Assembly
a)	02-2364	Coil Plunger
b)	20-8716-5	Roll Pin, 1/8 x 7/16
c)	03-8085	Armature Link
4	4700-00030-00	Flatwasher, 17/64 x 1/2 x 15ga.
5	A-5653	Mounting Bracket Assembly

Associated Parts for Left Kicker

B-11203-L-1	Coil & Bracket Assembly
B-7572-1	Bracket & Stop Assembly
01-8-508-S	Coil Retaining Bracket
4006-01017-06	Mach. Screw, 6-32 x 3/8
4406-01119-00	Nut, 6-32 ESN
AE-26-1500	Coil Assembly
03-7066	Coil Tubing

Associated Parts for Right Kicker

B-11203-R-1	Coil & Bracket Assembly
B-7572-1	Bracket & Stop Assembly
01-8-508-S	Coil Retaining Bracket
4006-01017-06	Mach. Screw, 6-32 x 3/8
4406-01119-00	Nut, 6-32 ESN
AE-26-1500	Coil Assembly
03-7066	Coil Tubing

Ball Trough Switches

(Viewed from underside of playfield to show locations)

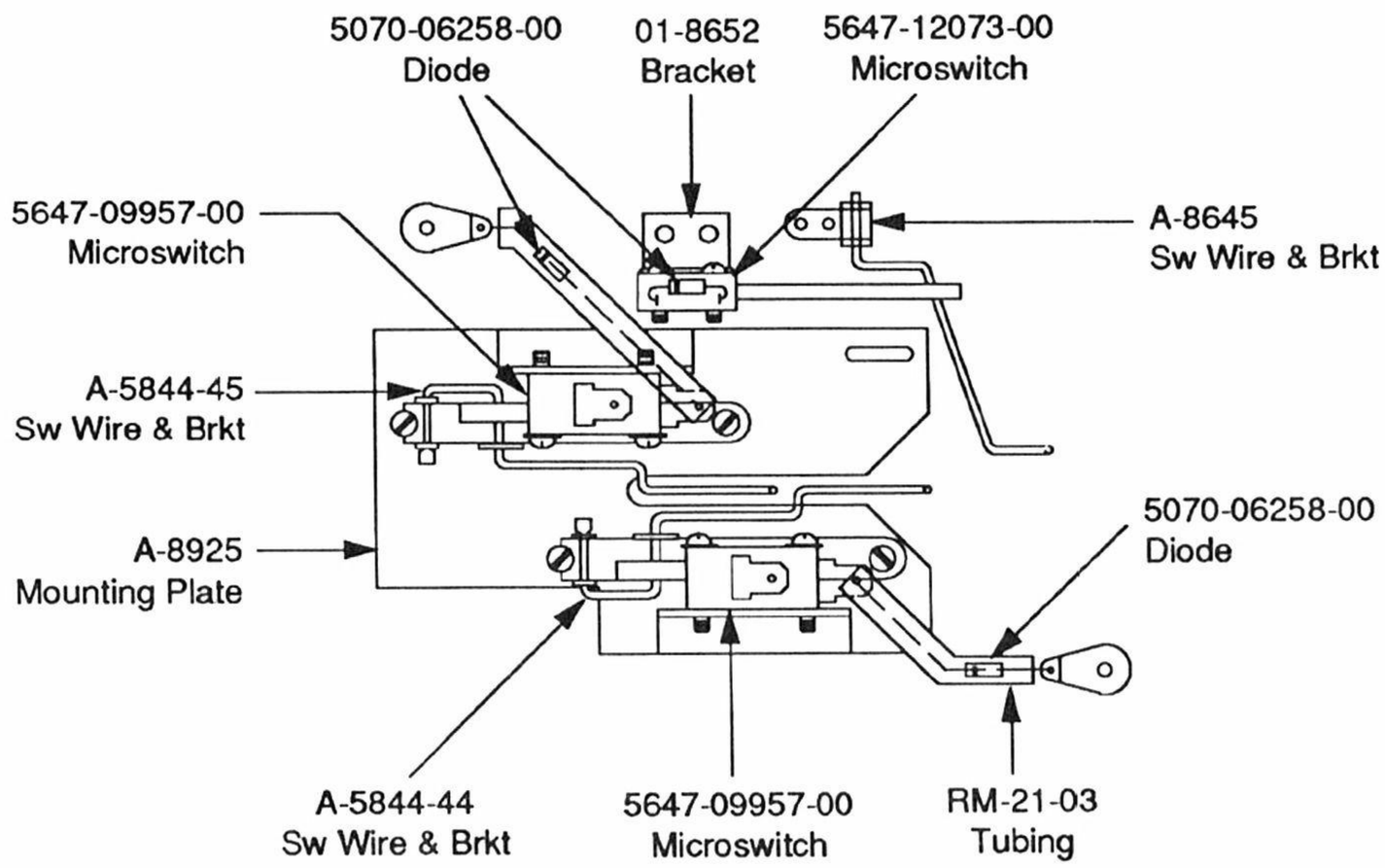

B-10686-1 Knocker Assembly

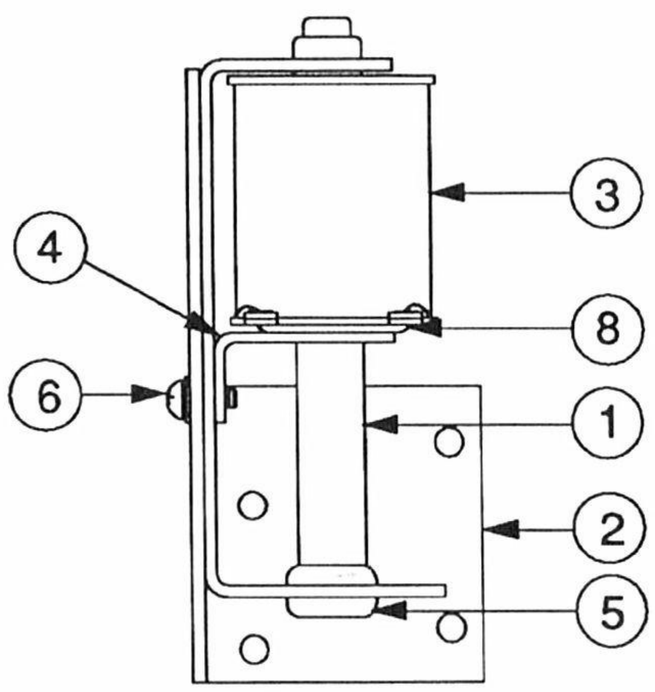

Item	Part Number	Description
1	A-5387	Coil Plunger Assembly
a)	02-2653	Coil Plunger
b)	03-6013	Bell Arm Ext.
2	B-7409-2	Mtg. Bracket Assembly
3	AE-23-800	Coil Sub-Assembly
4	01-8-508-T	Coil Retaining Bracket
5	23-6420	Rubber Grommet
6	4008-01017-06	Mach. Screw, 8/32 x 3/8
7	H-11835	Knocker Cable
8	03-7067-5	Coil Tubing

B-9361-R-1
Ball Eject Assembly

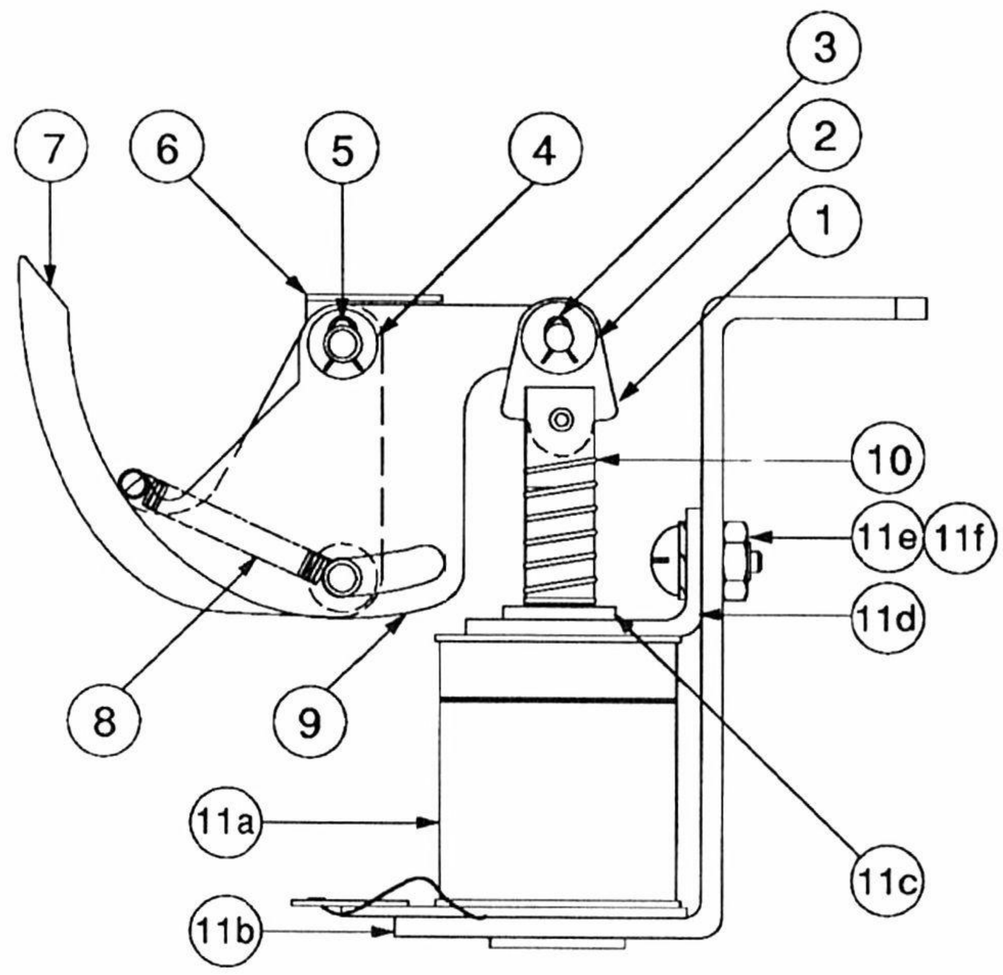

Item	Part Number	Description
1	12-6227	Hairpin Clip
2	A-7471-R	Eject Cam Assembly
3	10-362	Ejector Spring (plain)
4	A-6949-R	Spring Plate Assembly
5	A-8050-1	Coil Plunger Assembly, 2-1/8"
a)	02-3407-2	Coil Plunger, 2-1/8"
b)	20-8716-5	Roll Pin, 1/8 x 7/16
c)	03-8085	Armature Link
6	12-6227	Hairpin Clip
7	4700-00030	Flatwasher, 17/64 x 1/2 x 15ga.
8	4700-00103-00	Flatwasher, 17/64 x 1/2 x 28ga.
9	A-8268	Mounting Bracket Assembly
	Associated Parts	
10	10-128	Spring
11	A-14375	Coil & Bracket Assembly
a)	AE-26-1500	Coil Assembly
b)	B-11493	Bracket & Stop Assembly
c)	01-8-508-S	Coil Retaining Bracket
d)	4006-01017-06	Machine Screw, 6-32 x 3/8
e)	4406-01119-00	Nut, 6-32 ESN

B-9361-R-5
Ball Eject Assembly

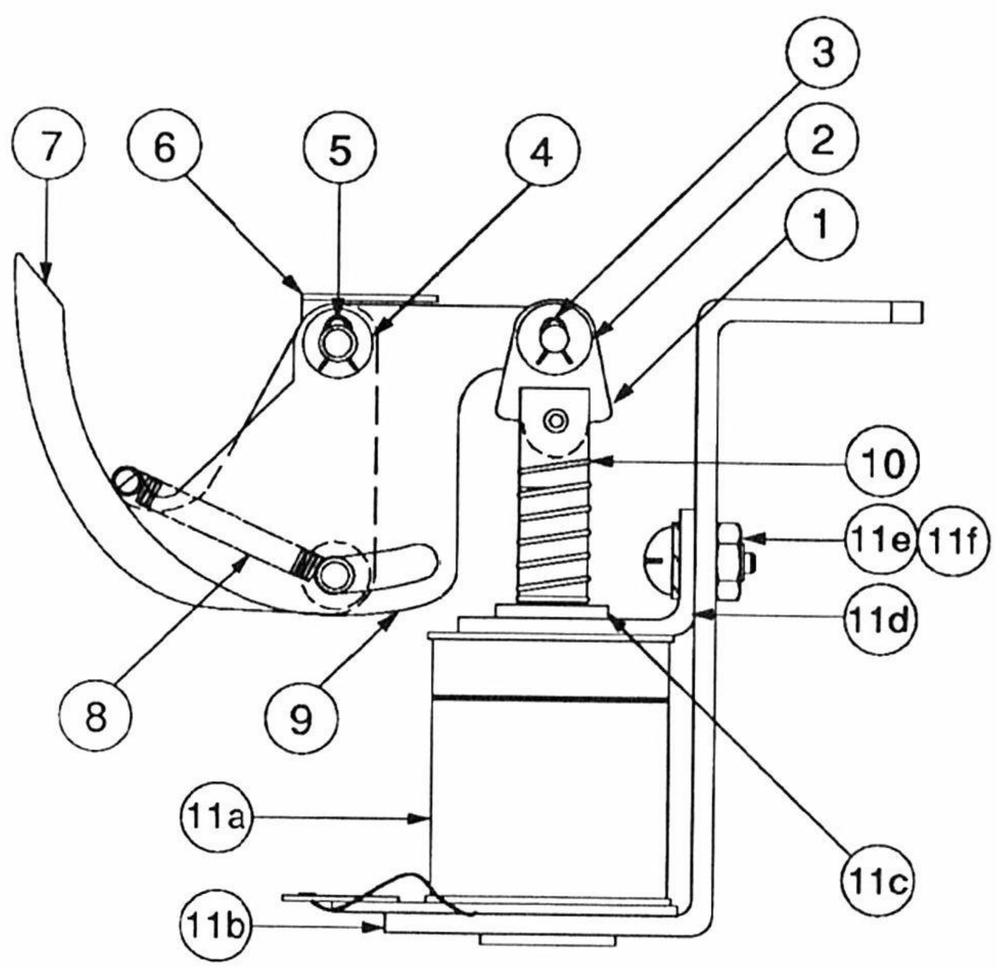

Item	Part Number	Description
1	12-6227	Hairpin Clip
2	A-7471-R	Eject Cam Assembly
3	10-320	Ejector Spring
4	A-6949-R	Spring Plate Assembly
5	A-8050-1	Coil Plunger Assembly, 2-1/8"
a)	02-3407-2	Coil Plunger, 2-1/8"
b)	20-8716-5	Roll Pin, 1/8 x 7/16
c)	03-8085	Armature Link
6	12-6227	Hairpin Clip
7	4700-0003-00	Flatwasher, 17/64 x 1/2 x 15ga.
8	4700-00103-00	Flatwasher, 17/64 x 1/2 x 28ga.
9	A-8268	Mounting Bracket Assembly
	Associated Parts	
10	10-128	Spring
11	B-11203-L-1	Coil & Bracket Assembly
a)	B-7572-1	Bracket & Stop Assembly
b)	01-8-508-S	Coil Retaining Bracket
c)	4006-01017-06	Machine Screw, 6-32 x 3/8
d)	4406-01119-00	Nut, 6-32 ESN
e)	AE-26-1500	Coil Assembly
12	03-7066	Coil Tubing

A-14422
Ball Gate Actuator

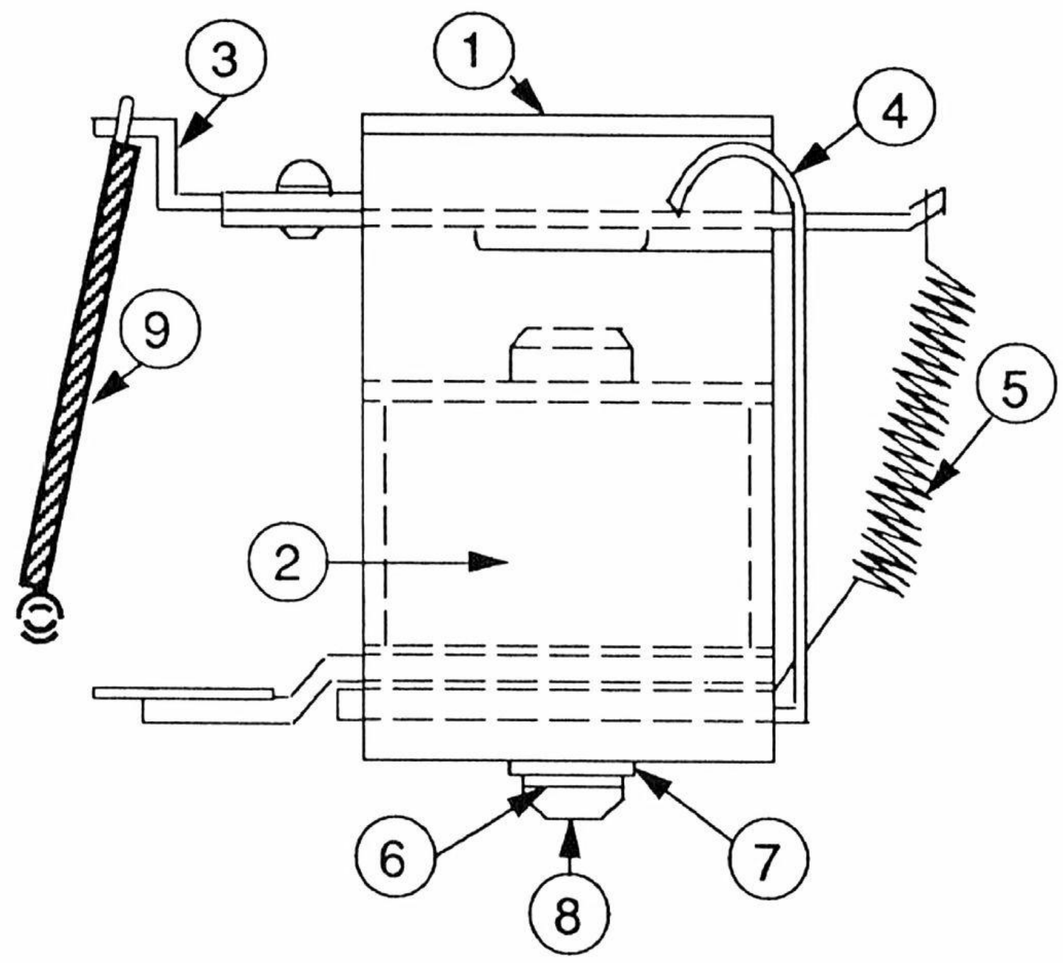

Item	Part Number	Description
1	01-8111	Ball Gate Coil Bracket
2	A-14406	Coil Assembly-Small
3	A-11146	Armature Assembly
4	A-6892	Frame and Eyelet
5	10-120	Spring
6	4701-00003-00	Lockwasher, #8 Split
7	4700-00089-00	Flatwasher, .172 x 7/16, 16ga.
8	4008-01021-07	Machine Screw, 8-32 x 7/16 P-RHBR
9	10-194	Extension Spring

Associated parts for Left Ball Gate Actuator Assembly

B-10732-L	Ball Gate Assembly-Left
01-6935	Ball Gate Bracket
01-6938	Mounting Bracket
12-6657-L	Wireform
12-6882-1	Wire Hinge Pin, 1-3/4

Associated parts for Right Ball Gate Actuator Assembly

B-10732-R	Ball Gate Assembly-Right
01-6935	Ball Gate Bracket
01-6938	Mounting bracket
12-6657-R	Wireform
12-6882-1	Wire Hinge Pin, 1-3/4

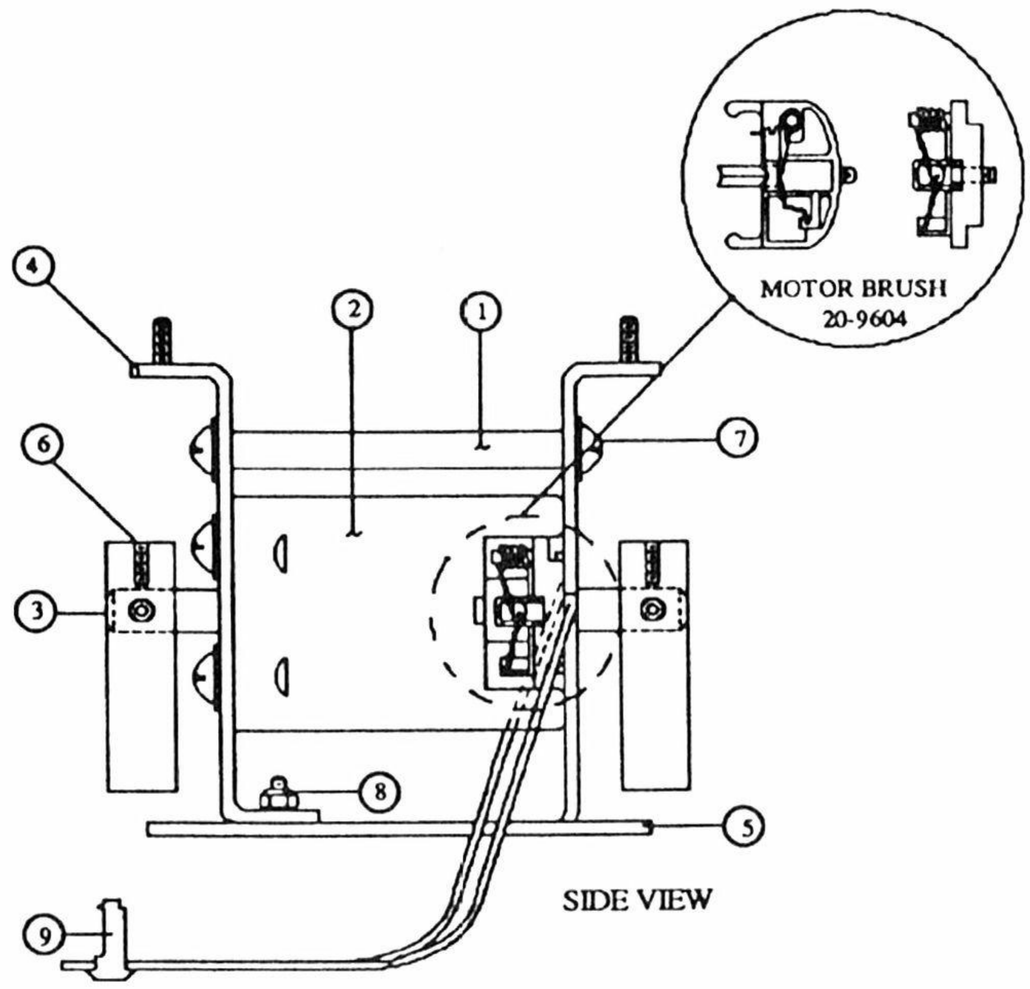

B-12388 Shaker Assembly

Item	Part Number	Description
1	02-4353	Spacer
2	14-7951	Motor, 11 R.P.M.
3	20-9588	Eccentric Weight
4	A-12565	Front Mounting Bracket Assy
5	B-12389	Motor Mounting Bracket Assy
6	4008-01076-06	Set Screw, 8-32 x 3/8 Hex.
7	4008-01017-06	Machine Screw. 8-32 x 3/8
8	4408-01119-00	Nut, 8-32 E.S.N.A.
9	H-12541	Shaker Motor Cable

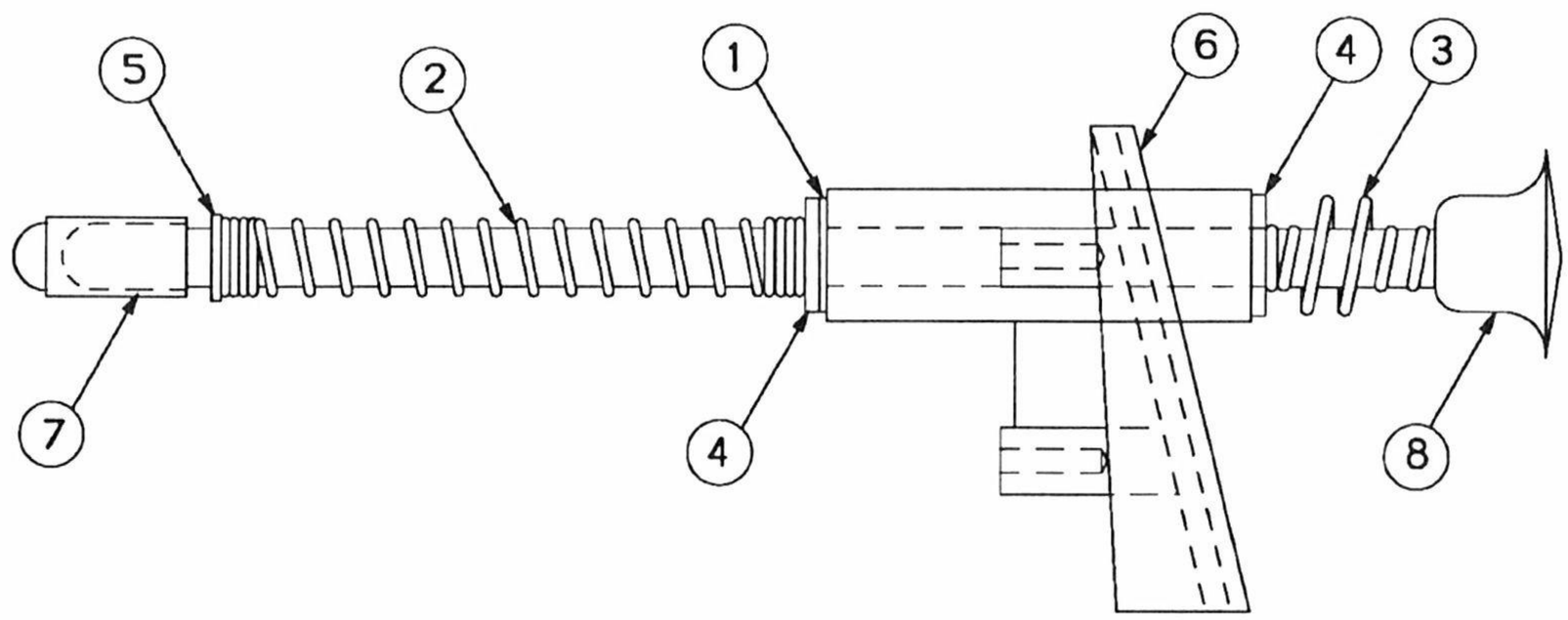

B-12445-1
Ball Shooter Assembly

Item	Part Number	Description
1	03-7357	Shooter Sleeve
2	10-148-1	Shooter Spring
3	10-149	Rod Spring
4	4700-00051-00	Flatwasher, 25/64 x 5/8 x 16ga.
5	20-8718-1	"C" Retaining Ring
6	21-6645-1	Ball Shooter Housing
7	23-6327	Rubber Shooter Tip.
8	20-9253-7	Rod Assembly

A-14102 WPC Coin Door Interface Board

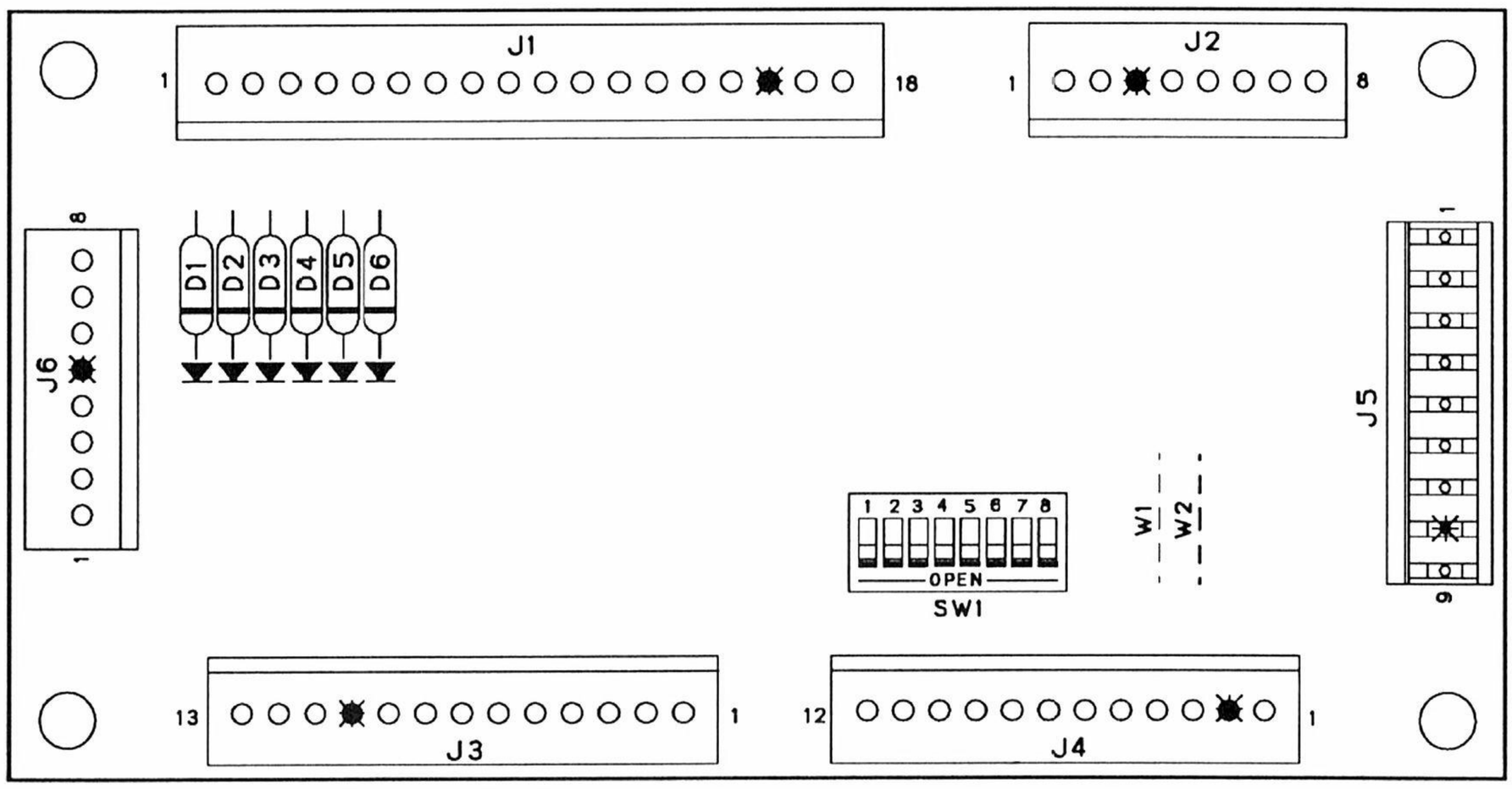

Item	Part Number	Ckt Designator	Description
1	5768-12716-00		PCB-WPC Coin Door
2	5070-09054-00	D1-D6	Diode, 1N4004, 1.0A.
3	5791-10862-18	J1	Connector, 18-pin Header Str Sq.
4	5791-10862-08	J2, J6	Connector, 8-pin Header Str Sq.
5	5791-10862-13	J3	Connector, 13-pin Header Str Sq.
6	5791-10862-09	J5	Connector, 9-pin Header Str Sq.
7	5792-10817-09	J5	9R Mt/End 22/.156

Note: For Belgium, France and England use A-14102-1 Coin Door Interface Board.

Coin Door Assembly
A-14148-1, U.S.A. door with decals.

Item	Part Number	Description	Quantity
1	27-1038	Button Cover	2 or 3
2	27-1041-1 58	Price Panel	2 or 3
3	27-1026-1 17	Coin Entry Plate	2 or 3
4	27-1016	Lock Assembly	1
5	27-1061-1	Coin Return - Bezel	1
6	27-1062	Coin Return Flap	1
7	27-1021	Button Housing - 2-slot	1
	27-1022	Button Housing - 3-slot	1
8	27-1111	Interlock Switch	1
9	27-1006-1	Coin Door , 2-Slot	1
	27-1007-1	Coin Door , 3-Slot	1
10	27-1005	Coin Door Frame	1
11	27-1003	M/C Screw, 6-32 x 3/16	4
12	5641-12724-00	Diagnostic Switch	1
13	27-1101	M/C Screw, 4-40 x 1/4	2
14	01-9885	Bracket, Diagnostic Switch	1
15	03-7601-4	Button, Red	2
	03-7601-7	Button, Black	2
16	27-1078	M/C Screw, 6-32 x 3/8	2 or 3
17	27-1039	Conical Spring	2 or 3
18	27-1079	Self-tapping Screw, #6 x 1/4	2
19	27-1077-1	Coinbox Cover	1
20	27-1066	Slam Switch	1
21	27-1067	M/C Screw, 4-40 x 1/2	2
22	27-1017	Nut (key)	1
23	27-1012	Locking Cam	1
24	27-1011	Locking Arm	2
25	27-1020	Washer	1
26	27-1018	Star Washer	1
27	27-1019	M/C Screw, 1/4-28 x 5/16	1
28-29	Not Used		
30	27-1112	Coin Inlet Chute	2 or 3
31	27-1088	Cable Clamp	2 or 3
32	27-1025	Key Hook	1
33	27-1086	Washer, #6	2 or 3
34	27-1078	M/C Screw, 6-32 x 3/8	1 or 2
	27-1113	M/C Screw, 6-32 x 7/16	1
35	27-1079	Self-tapping Screw, #6 x 1/4	2 or 3
36	27-1084	Lamp Socket	2 or 3
	27-1085	Lamp	2 or 3
37	27-1096	Self-tapping Screw, #5 x 3/8	2 or 3
38	27-1087	M/C Screw, 6-32 x 5/8	2 or 3
39	27-1082	Lever Arm	2 or 3
40	27-1097	Switch Cover	2 or 3
41	27-1091-1	Coin Accept Chute	2 or 3
42	27-1075	Wire Form (Small)	2 or 3
	or		
	27-1093	Wire Form (Large)	
43	27-1094	M/C Screw, 4-40 x 7/8	4 or 6
44	27-1087	M/C Screw, 6-32 x 5/8	4 or 6
45	27-1086	Washer, #6	4 or 6
46	27-1095	Nut, 4-40 ESNA	4 or 6
47	27-1076-1	Coin Return Box	1
48	27-1078	M/C Screw, 6-32 x 3/8	2
49	27-1092	Microswitch	2 or 3

A-14148-1 Coin Door Assembly

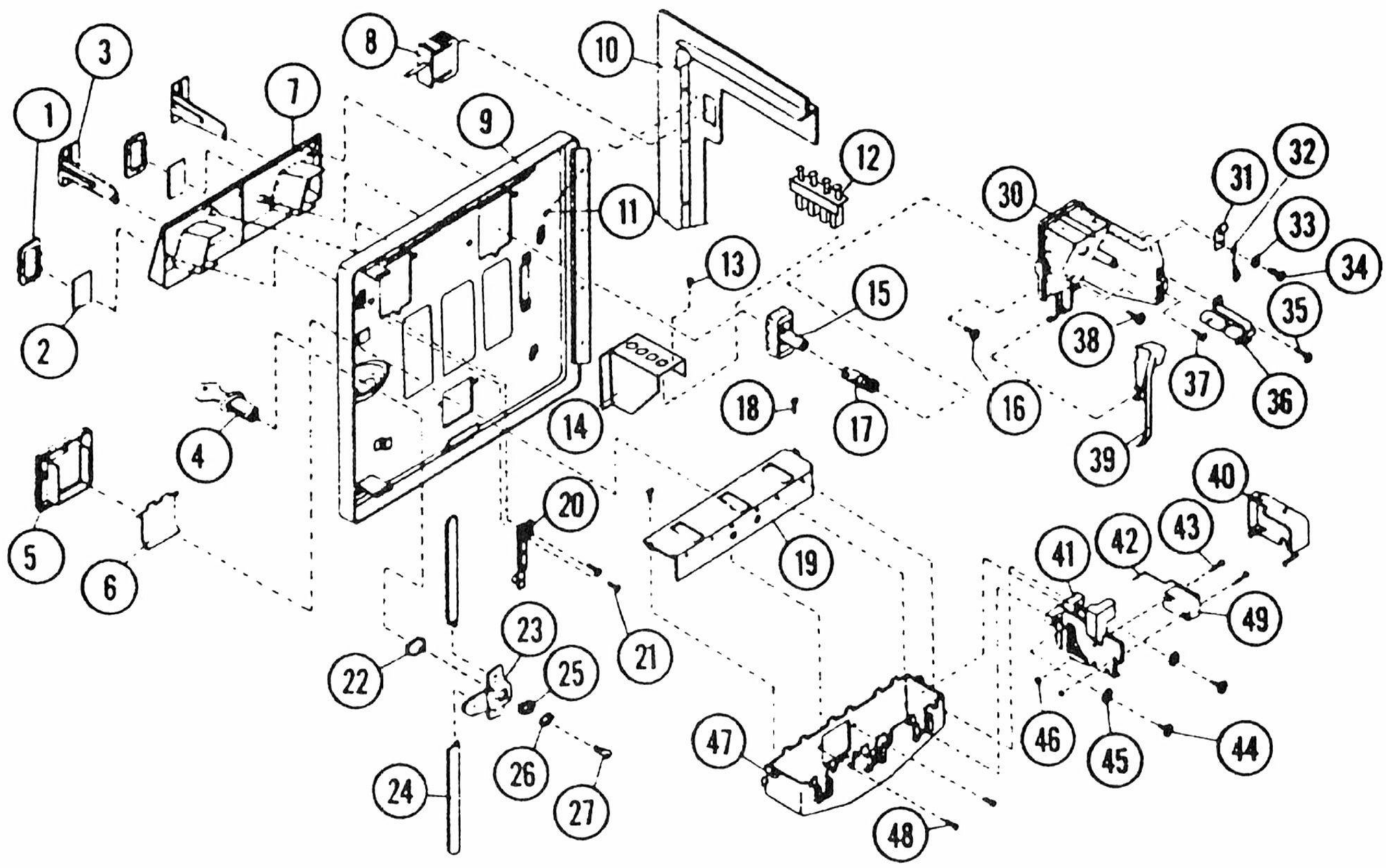

Pinball Front Box

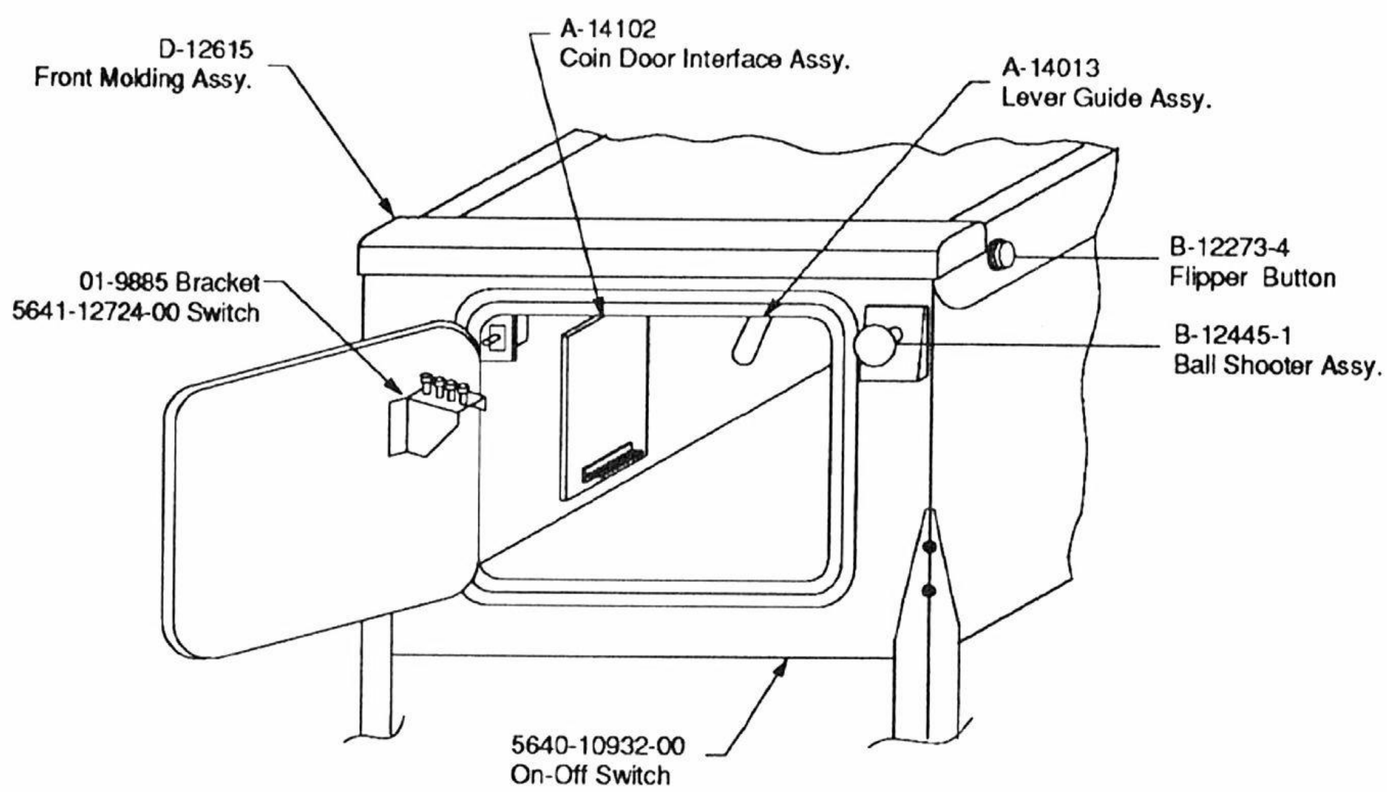

C-11223-1
3-Bank Drop Target

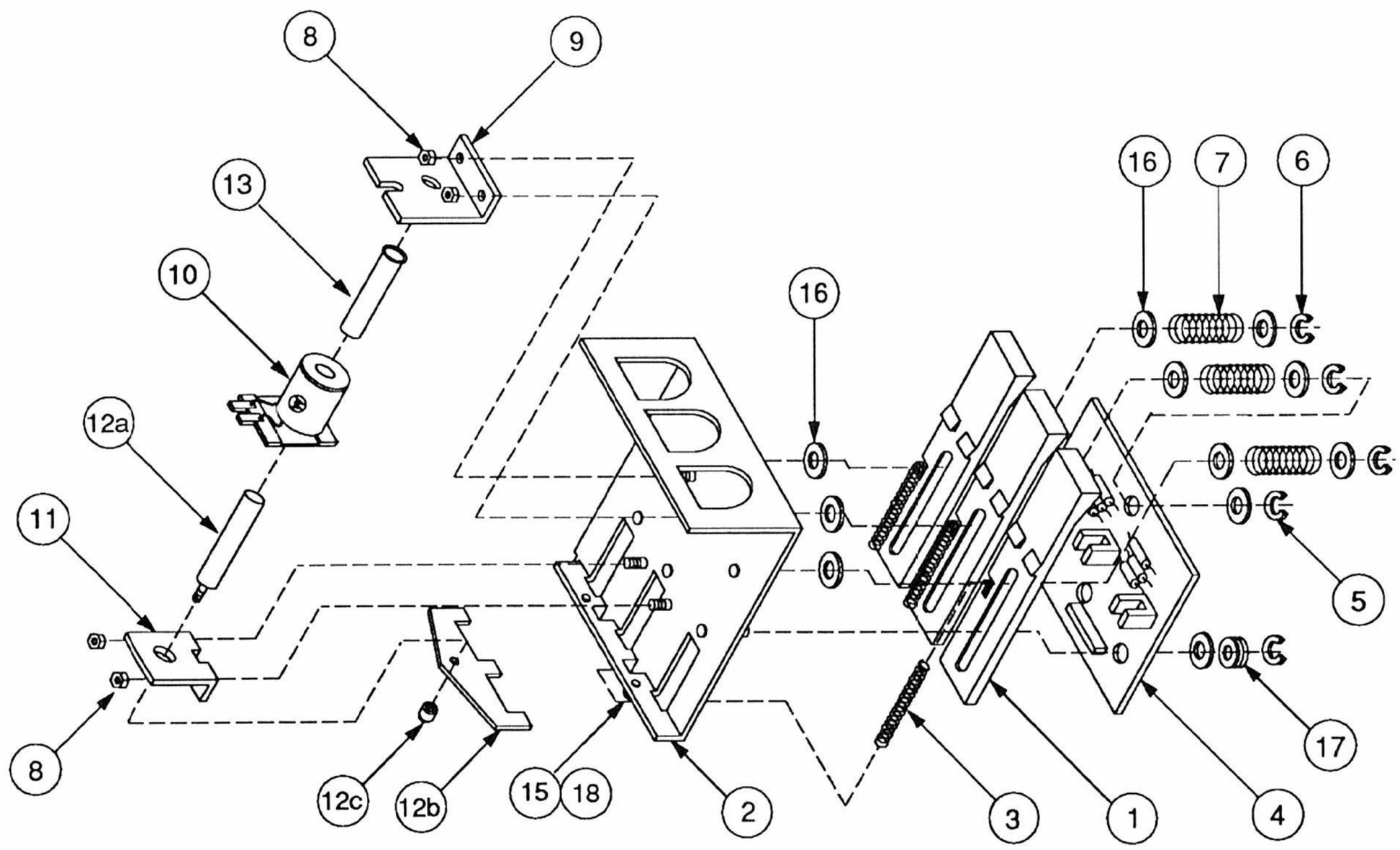

Item	Part Number	Description	Item	Part Number	Description
1	03-8036	Target, Plain	11	01-8413	Coil Mounting Bracket
2	B-13271	3-Bank Tgt Sub-assembly	12	A-11389	Plunger and Reset Plate Assy
3	10-362	Spring-Extension	a)	02-3972-1	Plunger
4	C-13205	3-Bank Drop Tgt Opto Board	b)	01-8408	Reset Plate
5	20-8712-18	"E"-Ring, 3/16" Shaft	c)	4410-01132-00	Nut, 10-32 ESN
6	20-8712-25	"E" Ring, 1/4" Shaft	13	03-7066-4	Coil Tubing
7	10-392	Spring-Compression	14	4700-00016-00	Flatwasher, 3/16 x 7/16 x 17ga.
8	4408-01119-00	Nut, 8-32 ESN	15	4008-01016-10	Machine Screw, 8-32 x 5/8
9	A-11397	Stop Bracket Assembly	16	4700-00072-00	Flatwasher, 17/64 x 1/2 x21ga.
10	AE-26-1200	Coil Assembly	17	23-6626	Rubber Grommet
			18	4408-01128-00	Nut, 8-32 KEPS

Associated Part

31-1463-20001	Decal

C-13205
3-Bank Drop Target Opto Board

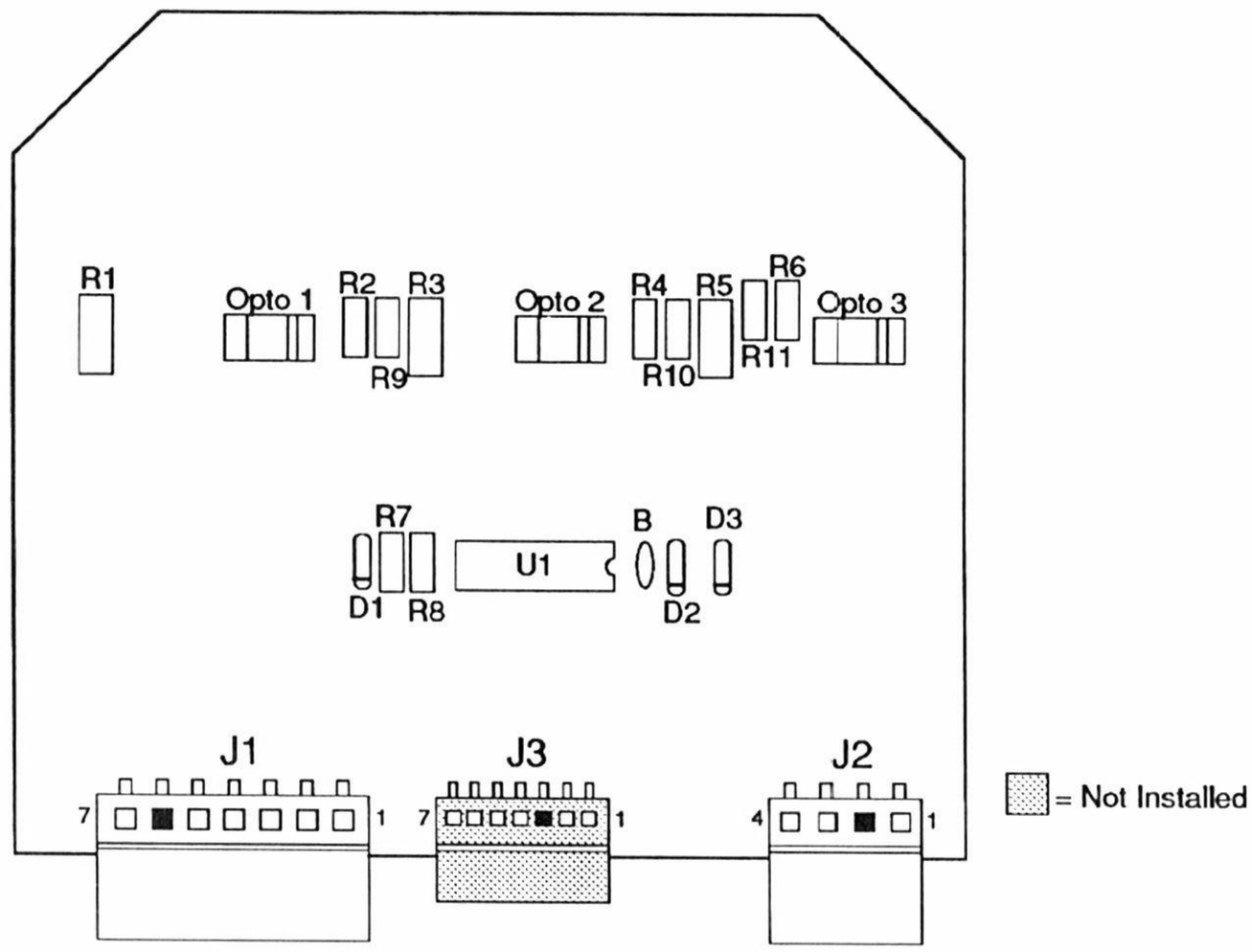

Part No.	Ckt. Designation	Description
5768-12546-00		3-Bank Opto Board
5490-10159-00	Opto 1-Opto 3	Opto Interruptor, MDL, S/G
5010-08930-00	R1, R3, R5	Resistor, 470 , 1/2W, 5%
5010-09162-00	R8	Resistor, 100 , 1/4W, 5%
5010-08774-00	R7	Resistor, 22K , 1/4W. 5%
5010-09324-00	R2, R4, R6	Resistor, 27K , 1/4W, 5%
5010-08773-00	R9-R11	Resistor, 18K , 1/4W, 5%
5043-08980-00	B	Capacitor, 0.1µfd., +80 -20
5370-12272-00	U1	I.C., Quad. Copm., LM339
5791-10869-04	J2	Connector, 4-pin R/A Sq. Pin
5791-10869-07	J1	Connector, 7-pin R/A Sq. Pin
5070-09054-00	D1-D3	Diode, 1N4004, 1.0A

Post

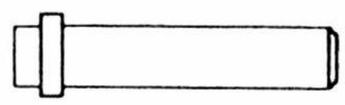

02-3409

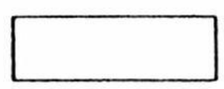

02-4020

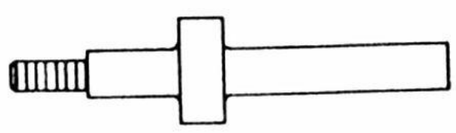

02-4036

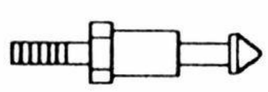

02-4195

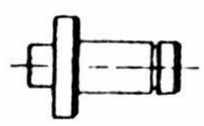

02-4271-1

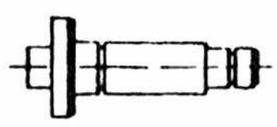

02-4271-2

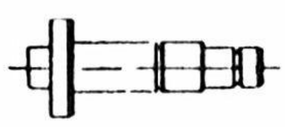

02-4271-3

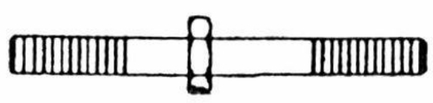

02-4424-1

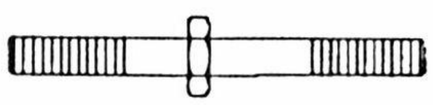

02-4424-2

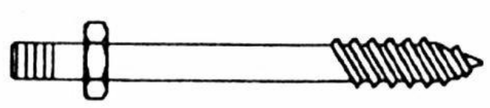

02-4426-1

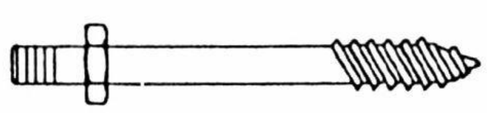

02-4426-2

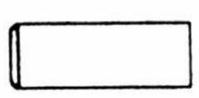

02-4434

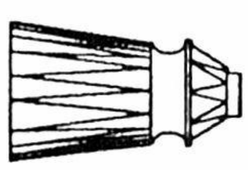

03-8319-9

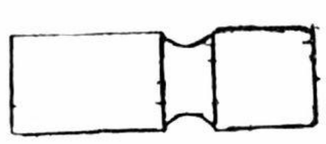

03-8365-9

Backbox Parts List

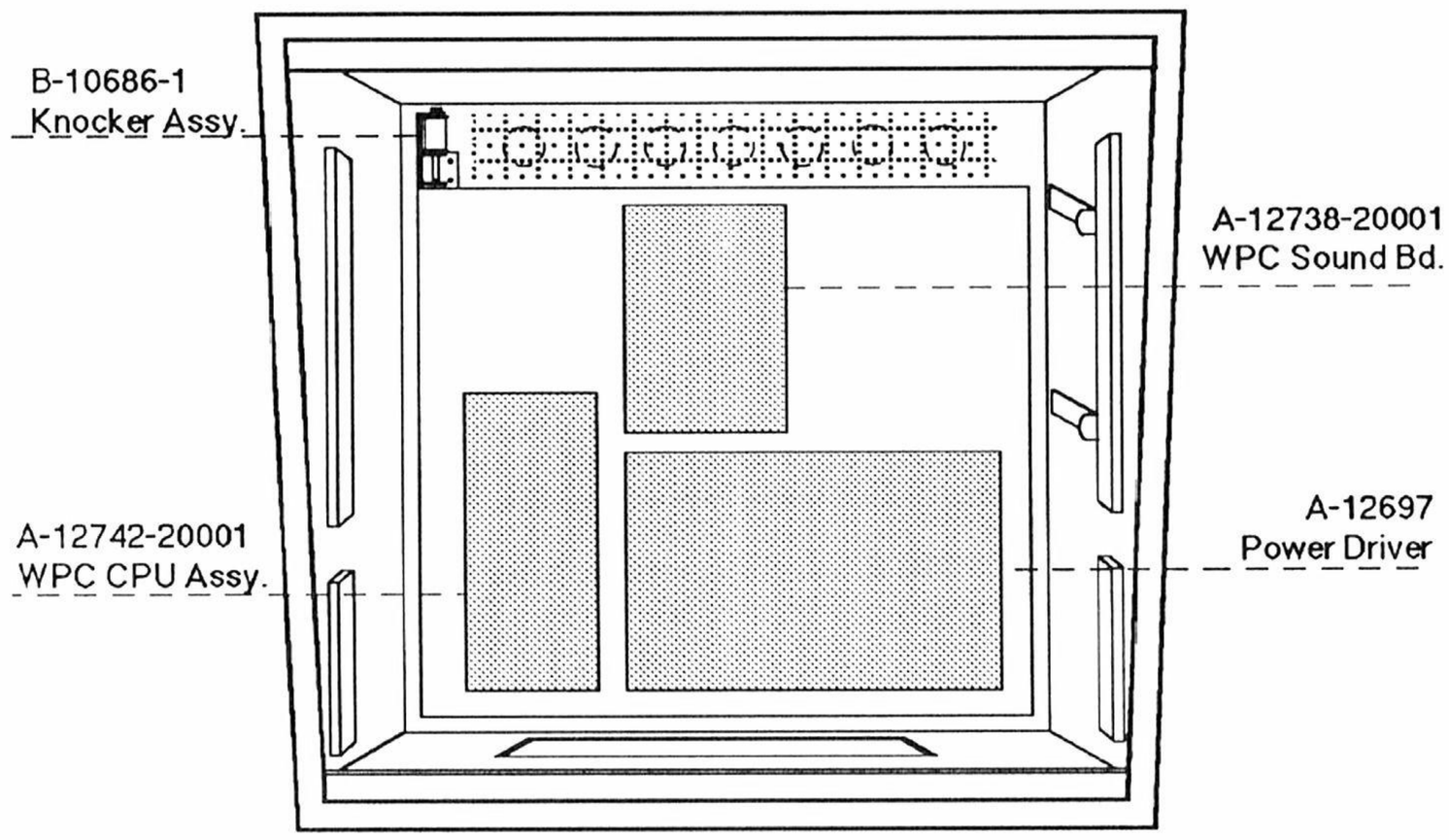

Item	Part Number	Description	Item	Part Number	Description
1	01-6645	Venting Screen	9	A-13767-20001	**Harley-Davidson** Backbox
2	B-10686-1*	Knocker & Bracket Assy	10	01-9047	Insert Stop Bracket
3	A-12497	Upr Insert Bd Hinge Assy	11	20-9637	Lock & Cam Kit
4	A-14092	Plate & Clip Assembly	12	A-14404	Speaker / Display Assembly
5	A-12498	Lwr Insert Bd Hinge Assy	a)	A-12739-1	WPC Display Driver Assy.
6	A-12697-1	Power Driver Assembly	b)	A-12794	WPC Single Display
7	A-12738-20001	WPC Sound Board	c)	5555-12015-00	Speaker, 8 , 6", 20w
8	A-12742-20001	WPC CPU Board	d)	5555-12068-00	Piezo Speaker, 4", 50w.

* Refer to Individual Unit's Parts List
** Insert Assembly not shown in Backbox Parts Location Diagram

Lamps

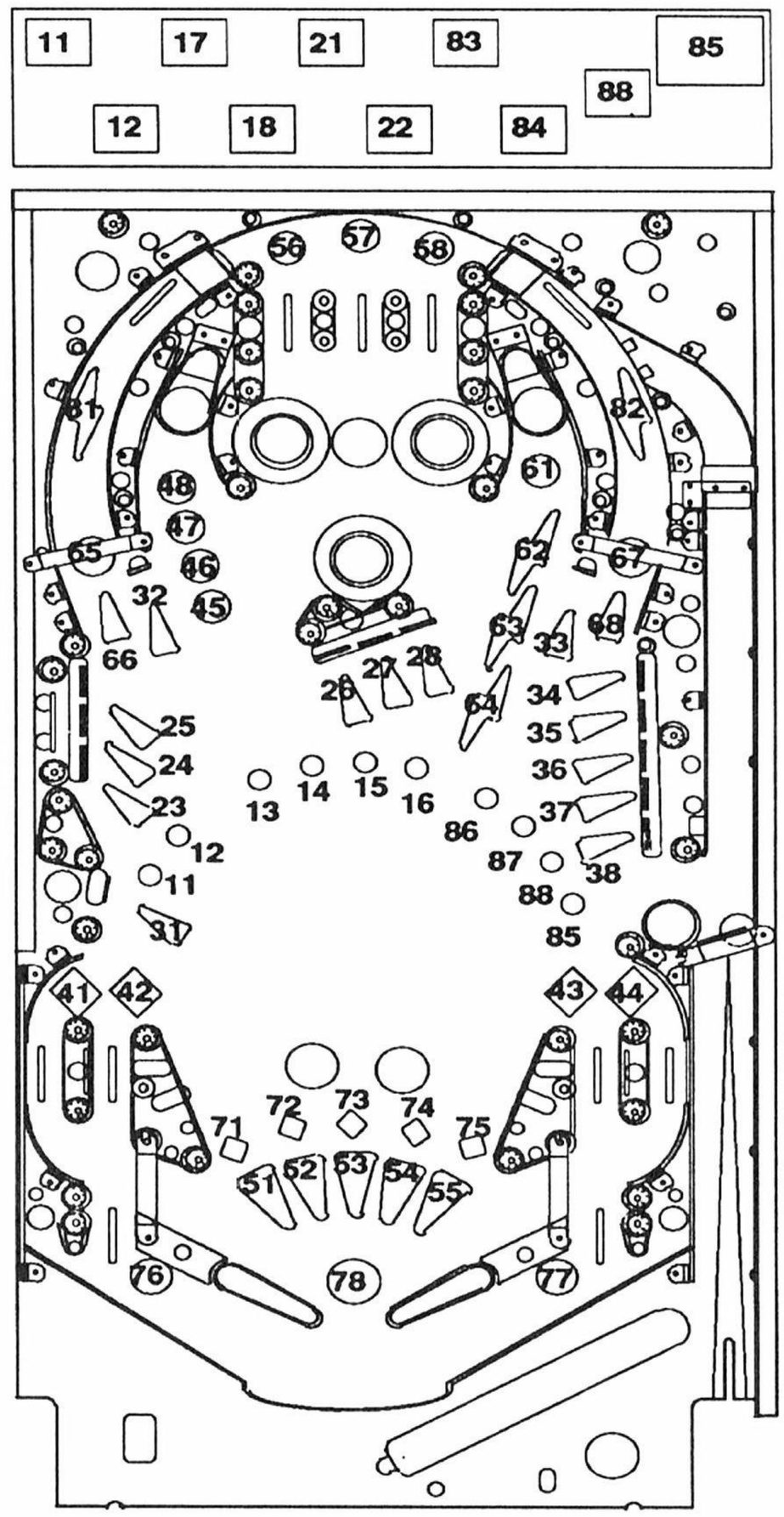

No.	Bulb	Description
11	#555	Los Angeles
12	#555	Salt Lake City
13	#555	Strugis
14	#555	Milwaukee
15	#555	Chicago
16	#555	Talladega
17	#44	Lamp 17 (Back Panel)
18	#44	Lamp 18 (Back Panel)
21	#44	Lamp 21 (Back Panel)
22	#44	Lamp 22 (Back Panel)
23	#44	H in Harley
24	#44	A in Harley
25	#44	R in Harley
26	#44	L in Harley
27	#44	E in Harley
28	#44	Y in Harley
31	#555	1st D in Davidson
32	#44	A in Davidson
33	#44	V in Davidson
34	#555	I in Davidson
35	#555	2nd D in Davidson
36	#555	S in Davidson
37	#555	O in Davidson
38	#555	N in Davidson
41	#555	B in Bike
42	#555	I in Bike
43	#555	K in Bike
44	#555	E in Bike
45	#555	Left Eject 25K
46	#555	Left Eject 50K
47	#555	Left Eject 100K
48	#555	Left Eject 150K
51	#555	2x Bonus
52	#555	3x Bonus
53	#555	4x Bonus
54	#555	5x Bonus
55	#555	6x Bonus
56	#555	U Top Lane
57	#555	S Top Lane
58	#555	A Top Lane
61	#44	Right Eject Lock
62	#44	Right Eject Speed Bonus
63	#555	Right Extra Ball
64	#44	Right Eject Jackpot
65	#44	Left Spinner 3K
66	#44	Left Advance City
67	#44	Right Spinner 3K
68	#44	Right Advance City
71	#44	Harley Value 50K
72	#44	Harley Value 100K

No.	Bulb	Description
73	#555	Harley Value 200K
74	#555	Harley Value 300K
75	#555	Harley Value 500K
76	#44	Left Drain Extra
77	#44	Right Drain Extra
78	#44	Ride Again
81	#44	Left Million
82	#44	Right Million
83	#44	Lamp 83 (Back Panel)
84	#44	Lamp 84 (Back Panel)
85	#555	Laconia
86	#555	Daytona
87	#555	York
88	#555	New York

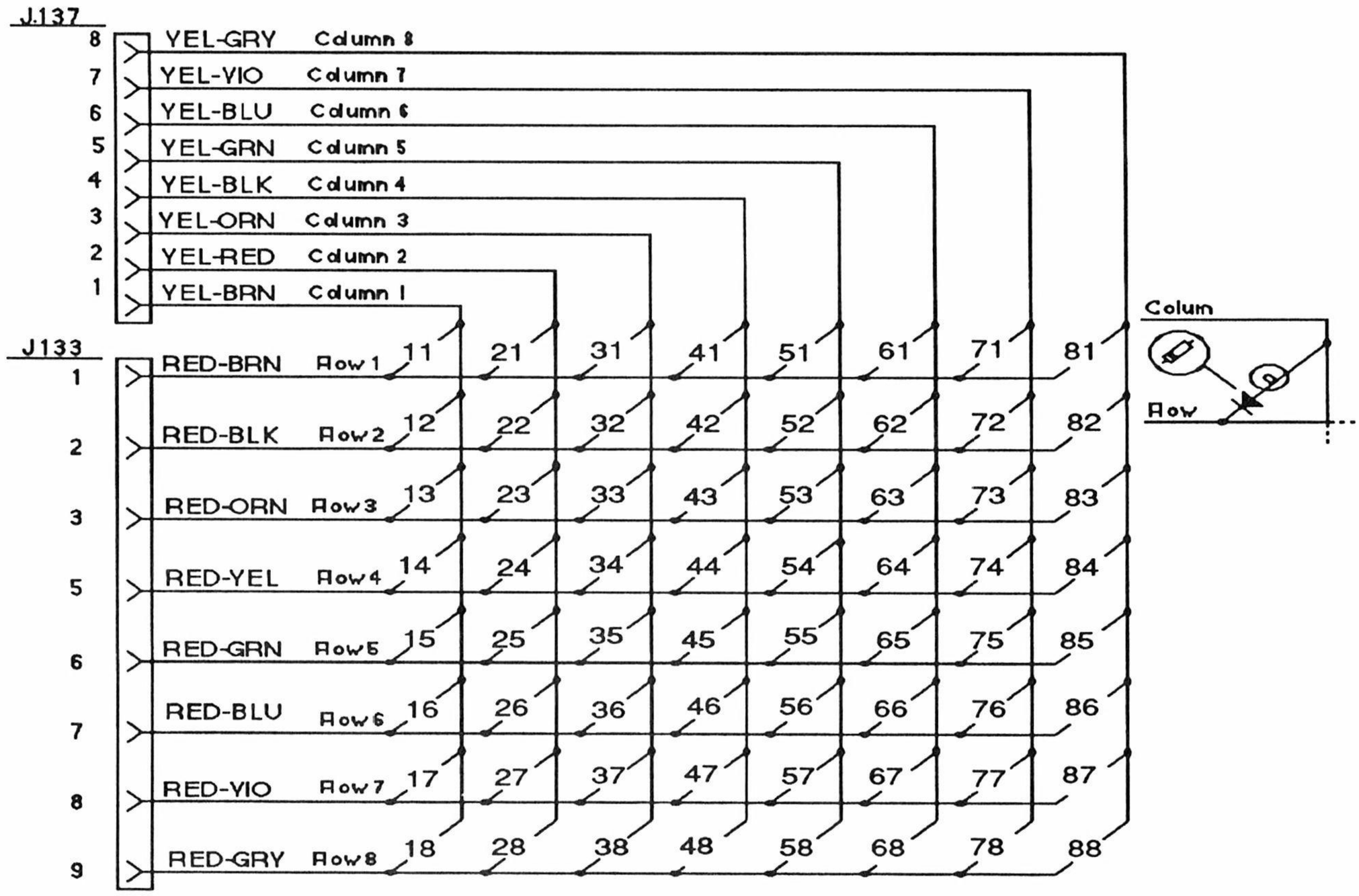

Lamp Matrix

Yellow (B+) — Red

Row \ Column	1 Yellow-Brown	2 Yellow-Red	3 Yellow-Orange	4 Yellow-Black	5 Yellow-Green	6 Yellow-Blue	7 Yellow-Violet	8 Yellow-Gray
1 Red-Brown	Los Angeles 11	Lamp 21 Back Panel 21	1st D in Davidson 31	B in Bike 41	2x Bonus 51	Right Eject Lock 61	Harley Value 50K 71	Left Million 81
2 Red-Black	Salt Lake City 12	Lamp 22 Back Panel 22	A in Davidson 32	I in Bike 42	3x Bonus 52	Right Eject Speed Bonus 62	Harley Value 100K 72	Right Million 82
3 Red-Orange	Sturgis 13	H in Harley 23	V in Davidson 33	K in Bike 43	4x Bonus 53	Right Eject Ex. Ball 63	Harley Value 200K 73	Lamp 83 Back Panel 83
4 Red-Yellow	Milwaukee 14	A in Harley 24	I in Davidson 34	E in Bike 44	5x Bonus 54	Right Eject Jackpot 64	Harley Value 300K 74	Lamp 84 Back Panel 84
5 Red-Green	Chicago 15	R in Harley 25	2nd D in Davidson 35	Left Eject 25K 45	6x Bonus 55	Left Spinner 3K 65	Harley Value 500K 75	Laconia 85
6 Red-Blue	Talladega 16	L in Harley 26	S in Davidson 36	Left Eject 50K 46	U Top Lane 56	Left Advance City 66	Left Drain Extra 76	Daytona 86
7 Red-Violet	Lamp 17 Back Panel 17	E in Harley 27	O in Davidson 37	Left Eject 100K 47	S Top Lane 57	Right Spinner 3K 67	Right Drain Extra 77	York 87
8 Red-Gray	Lamp 18 Back Panel 18	Y in Harley 28	N in Davidson 38	Left Eject 150K 48	A Top Lane 58	Right Advance City 68	Ride Again 78	New York 88

Switches

No.	Part No.	Description
11	A-9990-1	Right Flipper
12	A-9990-1	Left Flipper
13	A-5069-3	Start Button
14	20-6502-A	Plumb Bob Tilt
15	A-10417	Outhole
16	A-11680	Trough 1
17	p/o B-8925	Trough 2
18	p/o B-8925	Trough 3
21	27-1066	Slam Tilt
22	5643-09268-00	Front Door
23	(optional)	Token Dispenser
24		Not Used
25	B-13267	Left Jet Bumper
26	B-13267	Right Jet Bumper
27	B-13267	Lower Jet Bumper
28	A-9381-L	Lower Right Eject
31	A-12688	B in Bike
32	A-12688	I in Bike
33	A-12688	K in Bike
34	A-12688	E in Bike
35	A-9831-L	Top Right Eject
36	A-9831-L	Top Left Eject
37	SW-1A-114	Left Sling
38	SW-1A-114	Right Sling
41	A-12688	U Top Lane
42	A-12688	S Top Lane
43	A-12688	A Top Lane
44		Not Used
45		Not Used
46		Not Used
47		Not Used
48		Not Used
51	p/o C-11223-1	H in Harley
52	p/o C-11223-1	A in Harley
53	p/o C-11223-1	R in Harley
54	p/o C-11223-1	L in Harley
55	p/o C-11223-1	E in Harley
56	p/o C-11223-1	Y in Harley
57	B-11696-6	1st D in Davidson
58	B-12583-6	A in Davidson
61	B-12583-6	V in Davidson
62	B-12039-6	I in Davidson
63	B-12039-6	2nd D in Davidson
64	B-12039-6	S in Davidson
65	B-12039-6	O in Davidson
66	B-12039-6	N in Davidson
67	A-14392	Right Spinner
68	A-14392-1	Left Spinner
71	A-12688	Left Loop

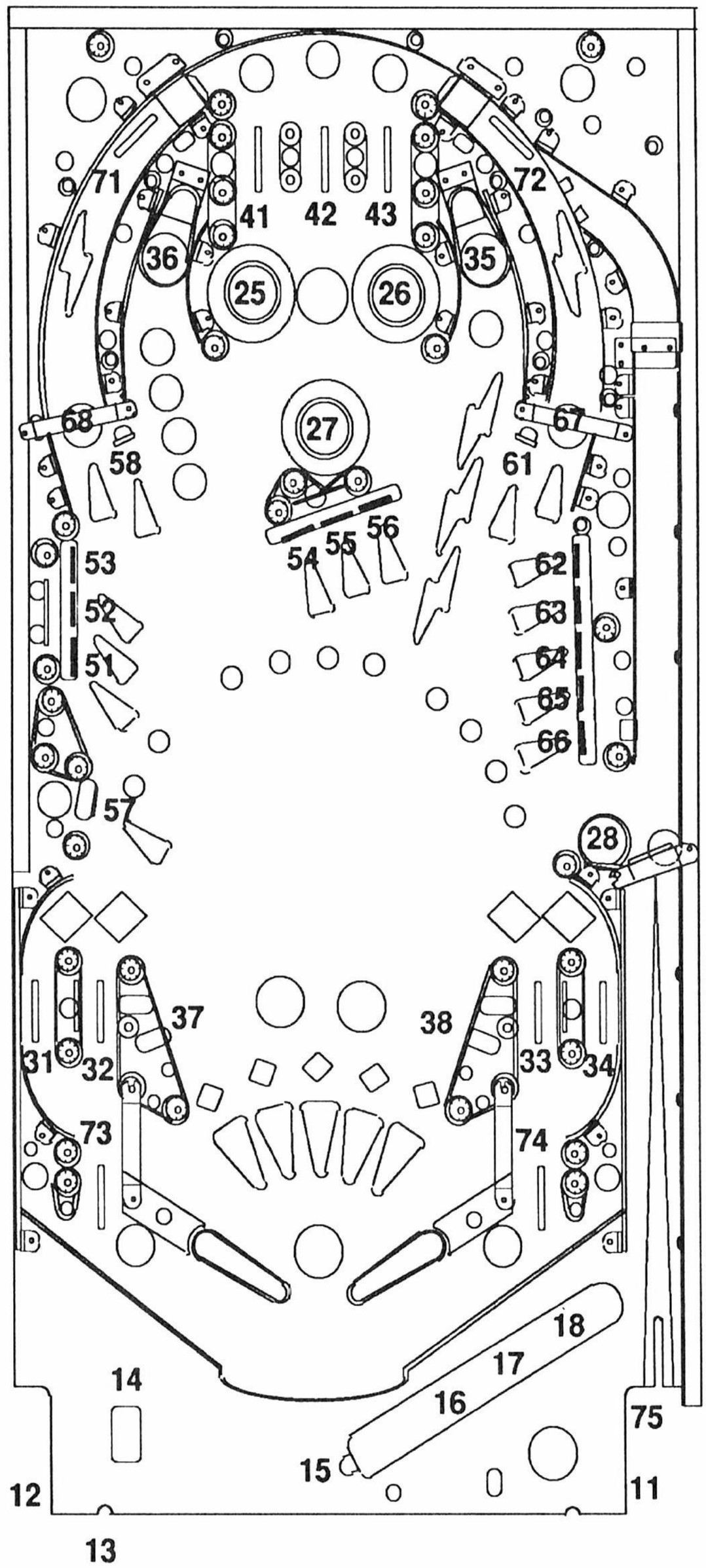

No.	Part No.	Description
72	A-12688	Right Loop
73	A-12688	Left Drain
74	A-12688	Right Drain
75	A-111619	Shooter Lane
76 to 88		Not Used

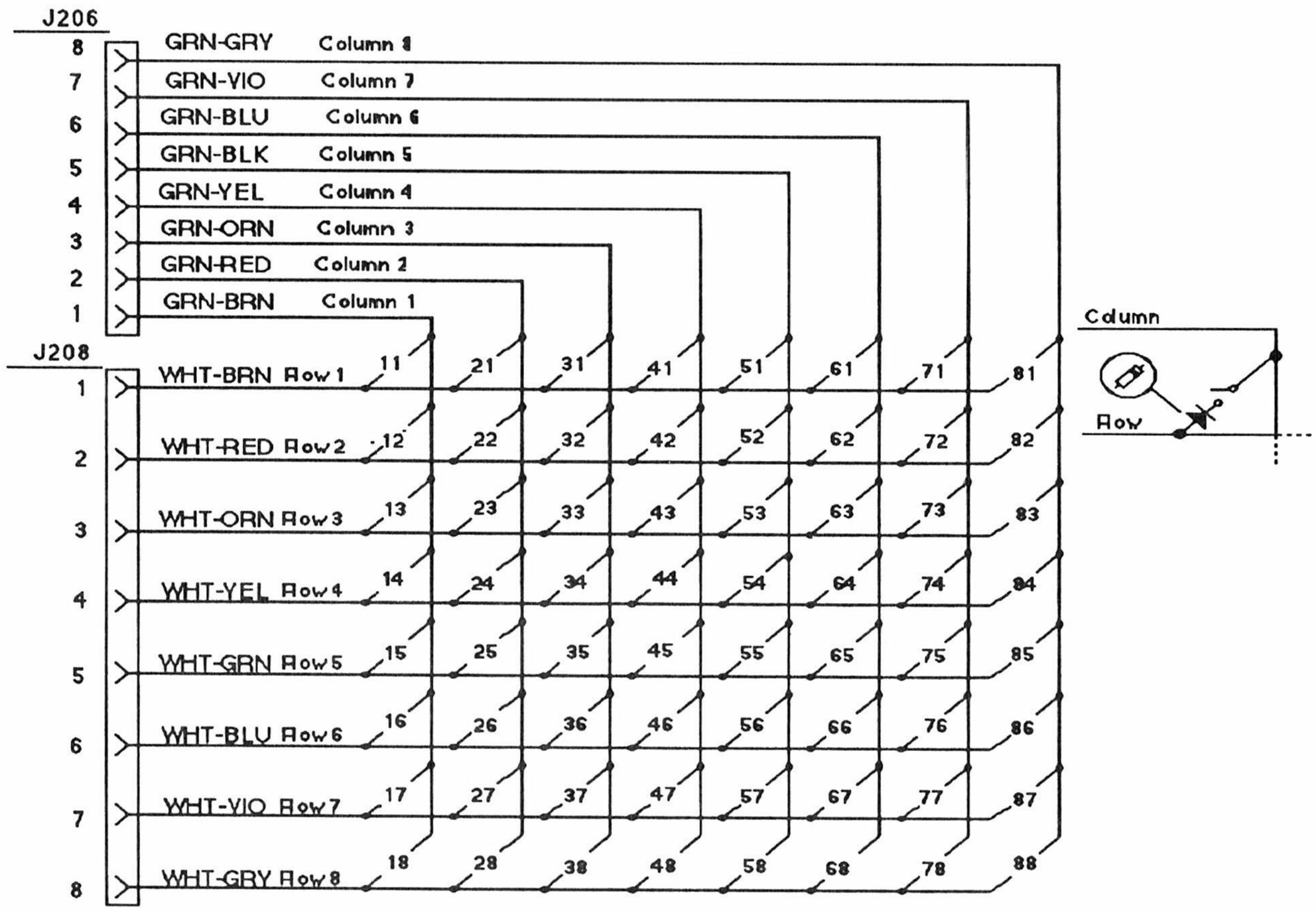

Switch Matrix

White —▶|—o/o— Green

Dedicated Grounded Switches	Row \ Column	1 Green-Brown	2 Green-Red	3 Green-Orange	4 Green-Yellow	5 Green-Black	6 Green-Blue	7 Green-Violet	8 Green-Gray
Orange-Brown Left Coin Chute D1	1 White-Brown	Right Flipper 11	Slam Tilt 21	B in Bike 31	U Top Lane 41	H in Harley 51	V in Davidson 61	Left Loop 71	Not Used 81
Orange-Red Center Coin Chute D2	2 White-Red	Left Flipper 12	Front Door 22	I in Bike 32	S Top Lane 42	A in Harley 52	I in Davidson 62	Right Loop 72	Not Used 82
Orange-Black Right Coin Chute D3	3 White-Orange	Start Button 13	Token Dispenser 23	K in Bike 33	A Top Lane 43	R in Harley 53	2nd D in Davidson 63	Left Drain 73	Not Used 83
Orange-Yellow 4th Coin Chute D4	4 White-Yellow	Plumb Bob Tilt 14	Not Used 24	E in Bike 34	Not Used 44	L in Harley 54	S in Davidson 64	Right Drain 74	Not Used 84
Orange-Green Normal Function: Service Credits Test Function: Escape D5	5 White-Green	Outhole 15	Left Jet Bumper 25	Top Right Eject 35	Not Used 45	E in Harley 55	O in Davidson 65	Shooter Lane 75	Not Used 85
Orange-Blue Normal Function: Volume Down Test Function: Down D6	6 White-Blue	Trough 1 16	Right Jet Bumper 26	Top Left Eject 36	Not Used 46	Y in Harley 56	N in Davidson 66	Not Used 76	Not Used 86
Orange-Violet Normal Function: Volume Up Test Function: Up D7	7 White-Violet	Trough 2 17	Lower Jet Bumper 27	Left Sling 37	Not Used 47	1st D in Davidson 57	Right Spinner 67	Not Used 77	Not Used 87
Orange-Gray Normal Function: Begin Test Test Function: Enter D8	8 White-Gray	Trough 3 18	Lower Right Eject 28	Right Sling 38	Not Used 48	A in Davidson 58	Left Spinner 68	Not Used 78	Not Used 88

Solenoids

No.	Part No.	Description
01	AE-26-1200	Outhole
02	AE-26-1200	Lane Feeder
03	AE-26-1200	Left Drop Bank
04	AE-26-1200	Center Drop Bank
05	AE-26-1200	Left Jet Bumper
06	AE-26-1200	Right Jet Bumper
07	AE-23-800	Knocker
08	AE-26-1200	Lower Jet Bumper
09	AE-26-1500	Lower Right Eject
10	AE-26-1500	Top Right Eject
11	AE-26-1500	Top Left Eject
12	A-14406	Top Right Gate
13	A-14406	Top Left Gate
14	Not Used	
15	AE-26-1500	Left Sling
16	AE-26-1500	Right Sling
17	#906	Top Right Flasher
18	#906	Top Left Flasher
19	#906	Right Million Flasher
20	#906	Left Million Flasher
21	#906	Speed Bonus Flasher
22	#906	Jackpot Flasher
23	#89	Speed Trap Flasher
24	#89	Helicopter Flasher
25	#89	Lower Right Flasher
26	#89	Lower Left Flasher
27	14-7951	Shaker Motor
28	#906	Jet Flasher

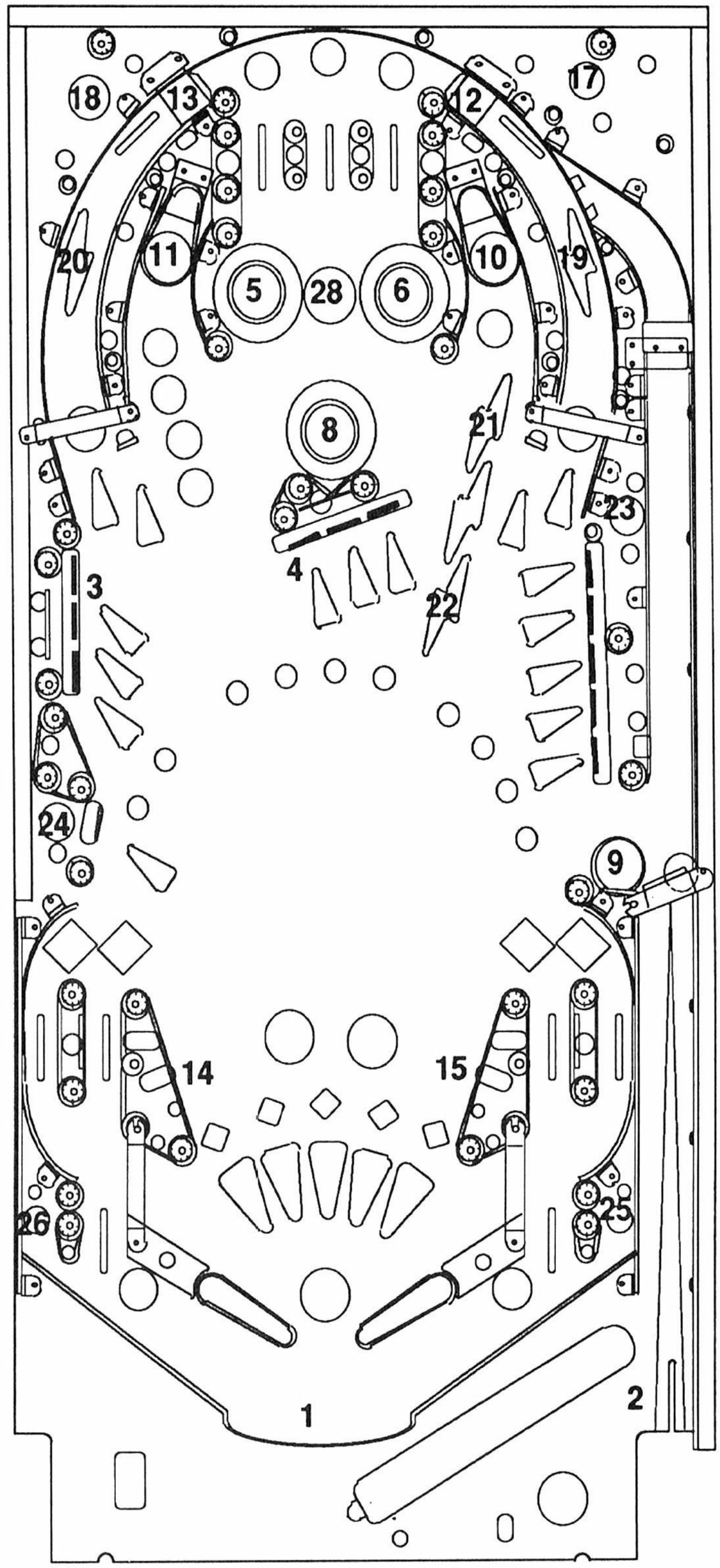

General Illumination Circuits

01	#555	String #1
02	#555	String #2
03	#555	Sting #3
04	#555	String #4
05	#555	String #5

Flippers

FL-11630	Lower Right Flipper
FL-11630	Lower Left Flipper

Solenoid Table

Sol. No.	Function	Solenoid Type	Wire Color	Connections	Driver Trnstr	Solenoid Part Number Flashlamp Type
01	Outhole	High Power	Vio-Brn	J130-1	Q82	AE-26-1200
02	Ball Shooter Lane Feeder	High Power	Vio-Red	J130-2	Q80	AE-26-1200
03	Left Drop Bank	High Power	Vio-Orn	J130-4	Q78	AE-26-1200
04	Center Drop Bank	High Power	Vio-Yel	J130-5	Q76	AE-26-1200
05	Left Jet Bumper	High Power	Vio-Grn	J130-6	Q64	AE-26-1200
06	Right Jet Bumper	High Power	Vio-Blu	J130-7	Q66	AE-26-1200
07	Knocker	High Power	Vio-Blk	J130-8	Q68	AE-23-800
08	Lower Jet Bumper	High Power	Vio-Gry	J130-9	Q70	AE-26-1200
09	Lower Right Eject	Low Power	Brn-Blk	J127-1	Q58	AE-26-1500
10	Top Right Eject	Low Power	Brn-Red	J127-3	Q56	AE-26-1500
11	Top Left Eject	Low Power	Brn-Orn	J127-4	Q54	AE-26-1500
12	Top Right Gate	Low Power	Brn-Yel	J127-5	Q52	A-14406
13	Top Left Gate	Low Power	Brn-Grn	J127-6	Q50	A-14406
14	Not Used	Low Power	Brn-Blu	J127-7	Q48	
15	Left Sling	Low Power	Brn-Vio	J127-8	Q46	AE-26-1500
16	Right Sling	Low Power	Brn-Gry	J127-9	Q44	AE-26-1500
17	Top Right Flasher	Flasher	Blk-Brn	J126-1	Q42	#906
18	Top Left Flasher	Flasher	Blk-Red	J126-2	Q40	#906
19	Right Million Flasher	Flasher	Blk-Orn	J126-3	Q38	#906
20	Left Million Flasher	Flasher	Blk-Yel	J126-5	Q36	#906
21	Speed Bonus Flasher	Special	Blu-Grn	J126-6	Q28	#906
22	Jackpot Flasher	Special	Blu-Blk	J126-7	Q30	#906
23	Speed Trap Flasher	Special	Blu-Vio	J126-8	Q34	#89
24	Helicopter Flasher	Special	Blu-Gry	J126-9	Q32	#89
25	Lower Right Flasher	Special	Blu-Brn	J122-1	Q26	#89
26	Lower Left Flasher	Special	Blu-Red	J122-3	Q24	#89
27	Shaker Motor	Special	Blu-Orn	J122-4	Q22	14-7951
28	Jet Flasher	Special	Blu-Yel	J122-5	Q20	#906
	General Illumination Circuits					
01	String 1	G.I.	Wht-Brn	J120-7	Q18	#555
02	String 2	G.I.	Wht-Vio	J119-1	Q10	#555
03	String 3	G.I.	Wht-Yel	J121-9	Q14	#555
04	String 4	G.I.	Wht-Orn	J120-8	Q16	#555
05	String 5	G.I.	Wht-Grn	J120-10	Q12	#555
	Lower Right Flipper		Blu-Yel	J109-7		FL-11630
	Lower Left Flipper		Gry-Yel	J109-5		FL-11630

Playfield Parts

Item	Part No.	Description
1	C-13174-R	Right Flipper Assembly
2	A-14188-R	Right Flipper Ball Guide
3	A-10744-1	Ball Gate Assembly
4	A-13985	Ball Guide Assembly
5	A-14405	Ball Gate Assembly
6	B-9361-R-1	Ball Eject Assembly
a)	A-14375	Coil & Bracket Assembly
7	B-12039-6	Stand-up Target
8	A-13977	Ball Guide Assembly
9	B-12583-6	Stand-up Target
10	A-14392-1	Spin Target Assembly
11	A-13975	Ball Guide Assembly
12	A-13976	Ball Guide Assembly
13	A-13980	Ball Guide Assembly
14	A-13978	Ball Guide Assembly
15	B-9361-R-5	Ball Eject Assembly
a)	B-11203-R-1	Coil & Bracket Assembly
16	B-10723-R	Ball Gate Assembly
17	A-13972	Ball Guide Assembly
18	B-10723-L	Ball Gate Assembly
19	A-13981	Ball Guide Assembly
20	A-13979	Ball Guide Assembly
21	B-9361-R-5	Ball Eject Assembly
a)	B-11203-R-1	Coil & Bracket Assembly
22	A-12872-1*	Jet Bumpers
23	A-14392	Spin Target Assembly
24	B-12583-6	Stand-up Target
25	C-11223-3	3-Bank Drop Target
26	B-11696-6	Stand-up Target
27	A-13982	Ball Guide Assembly
28	A-10744	Ball Gate Assembly
29	A-14188-L	Left Flipper Ball Guide
30	A-13174-L	Left Flipper Assembly
31	B-12665	Left Kicker (slingshot)
a)	B-11203-L-1	Coil & Bracket Assembly
32	B-12665	Right Kicker (slingshot)
a)	B-11203-R-1	Coil & Bracket Assembly
33	C-11223-3	3-Bank Drop Target
34	A-13974	Ball Guide Assembly
35	A-13973	Ball Guide Assembly

Parts Under Bottom Arch	
A-8039-3	Outhole Kicker
A-8645	Wireform & Bracket Assembly
A-10417	Micro Switch Assembly
A-11680	Sub-mini Switch Assembly
B-8623	Guide & Baffle Assembly
B-8925	Micro Switch & Plate Assembly
B-9362-L-2	Coil & Bracket Assembly
C-8235	Ball Runway Assembly
C-9638-3	Ball Shooter Lane Feeder
01-3569-1	Ball Return Runway
10-128	Kicker Spring
12-6542	Gate Wire

* The complete Thumper (jet) Bumper is not available as an assembly. The Thumper (jet) Bumper number is shown for reference purposes only. Order component parts individually, as shown in parts list.

Playfield Parts

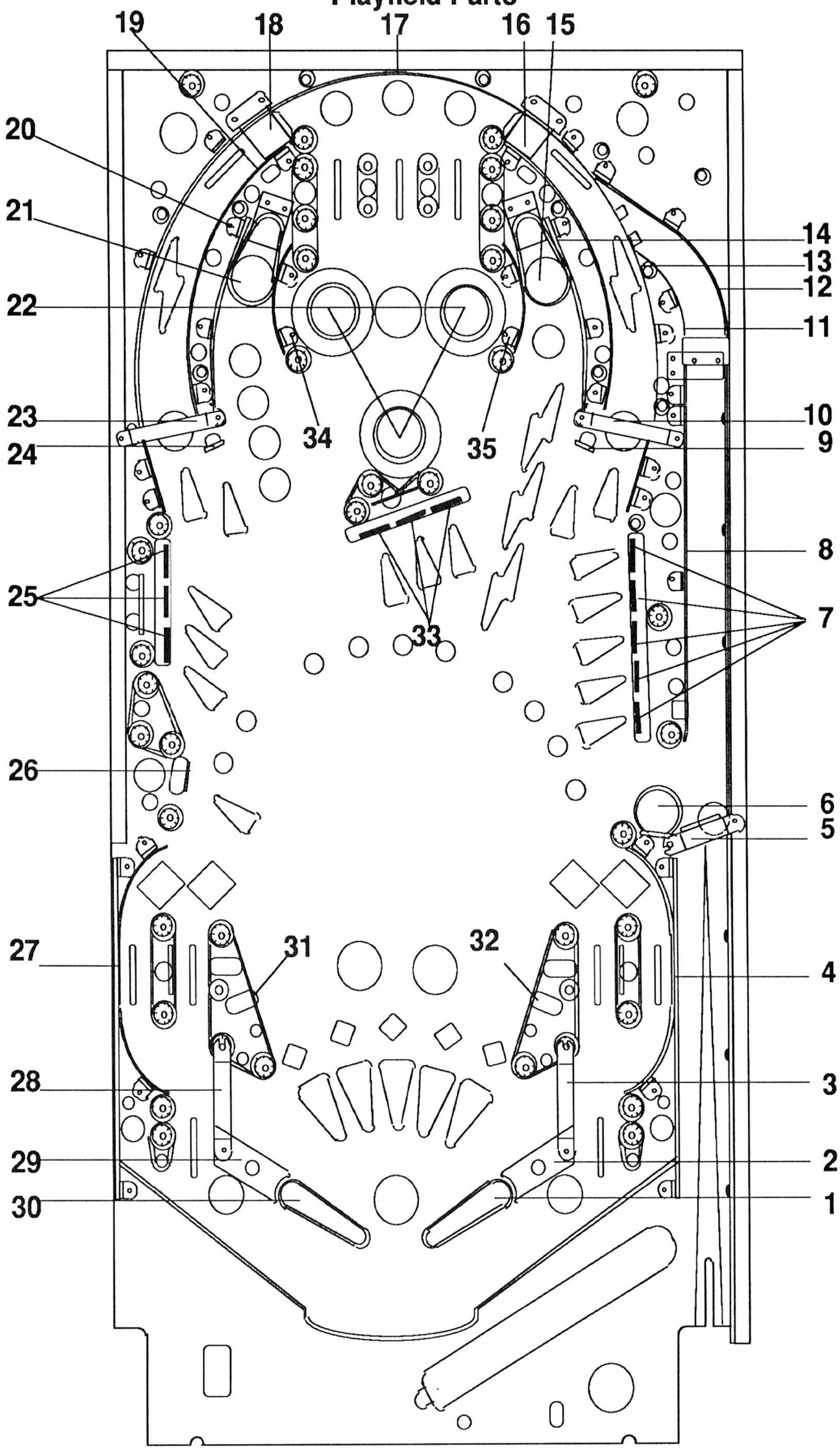

Rubber Rings

Item	Part No.	Description	Quantity
A	23-6300	5/16"	(8)
B	23-6301	3/4"	(2)
C	23-6302	1"	(2)
D	23-6303	1-1/4"	(2)
E	23-6304	1-1/2"	(3)
F	23-6305	2"	(2)
G	23-6306	2-1/2"	(2)
H	23-6519-4	Flipper Ring	(2)
I	23-6552	Bumper Sleeve	(1)
J	23-6641-1	White Ring	(6)

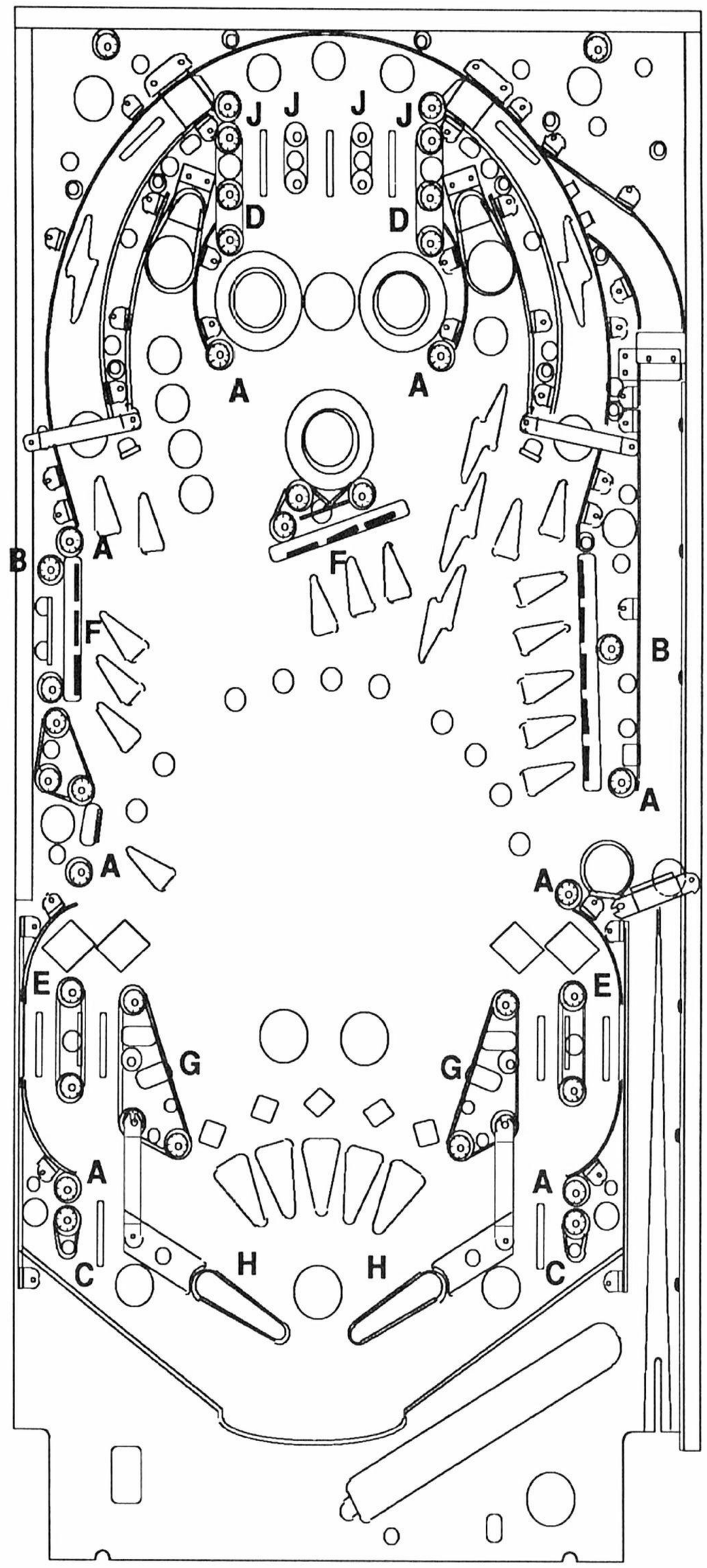

Section 3
Wiring Diagrams and Schematics

- ***Diagrams & Schematics***

Coin Interface Board
3-Bank Drop Target Opto Board
High Current Driver Board
Power Wiring
Solenoid Wiring
CPU Board
Audio Board
Power Driver Board
Display Driver Board
Interboard Wiring

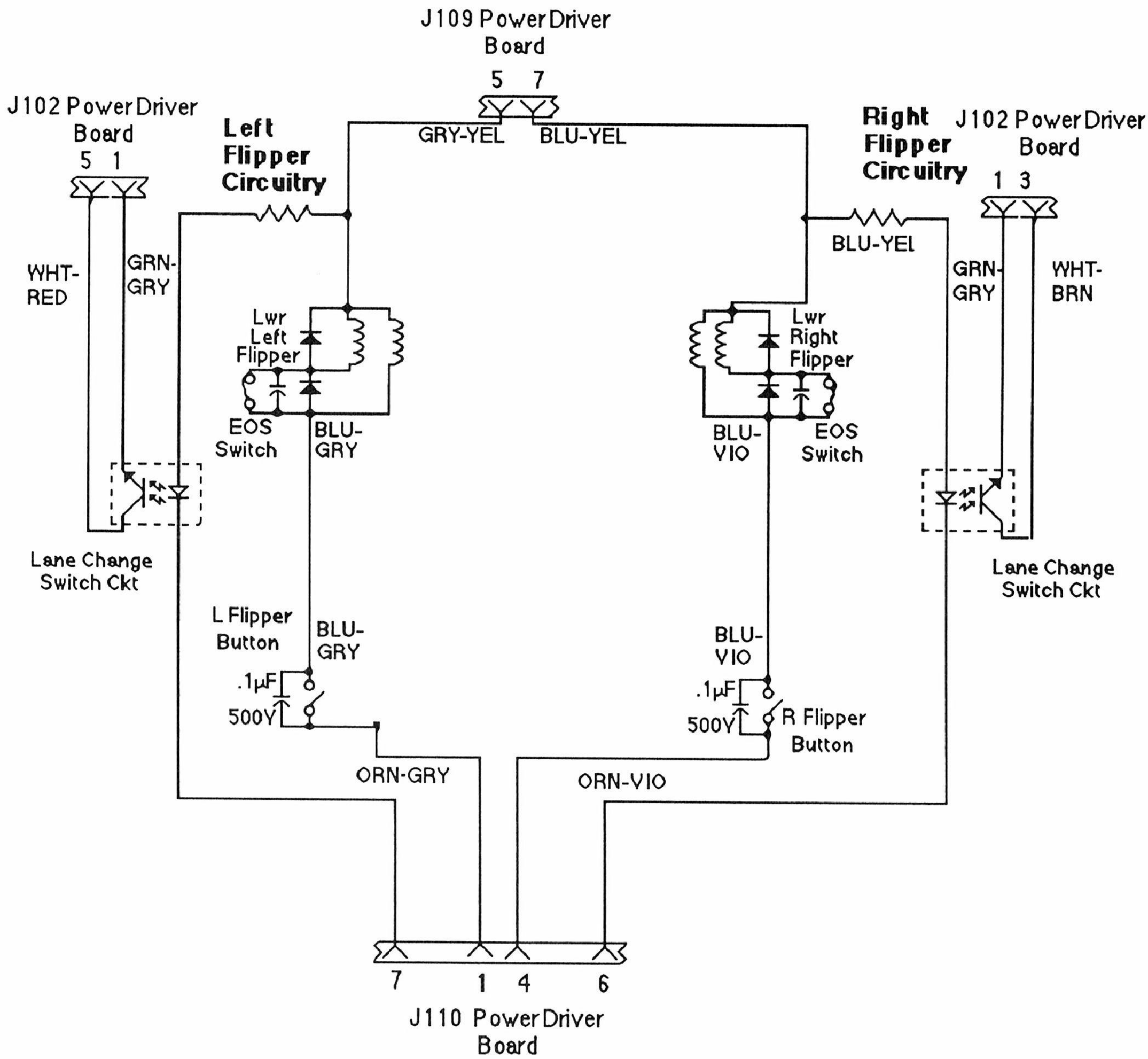

Flipper Wiring

H-A-R Left Drop Target Schematic

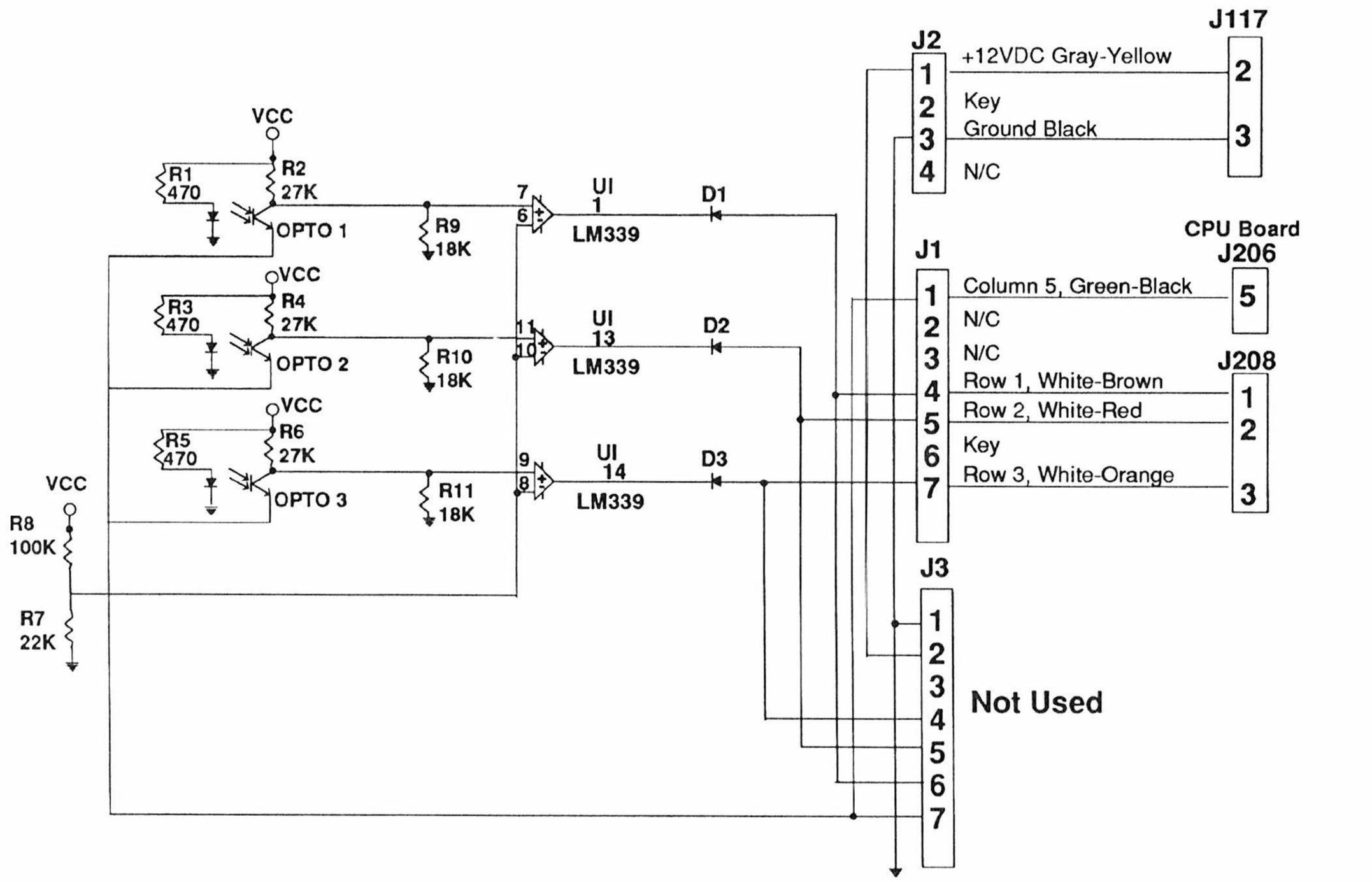

L-E-Y Center Drop Target Schematic

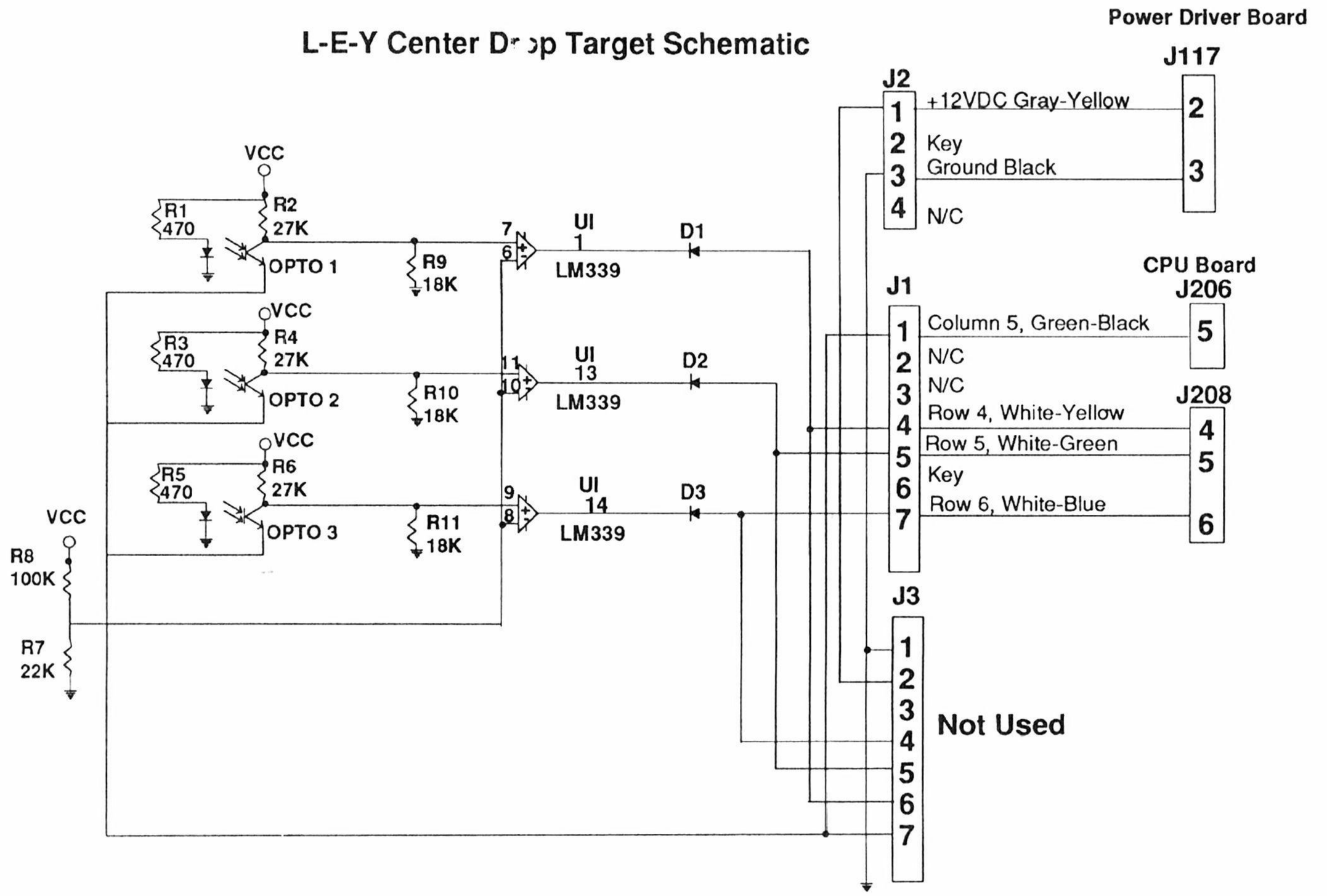

High Current Driver Board Schematic

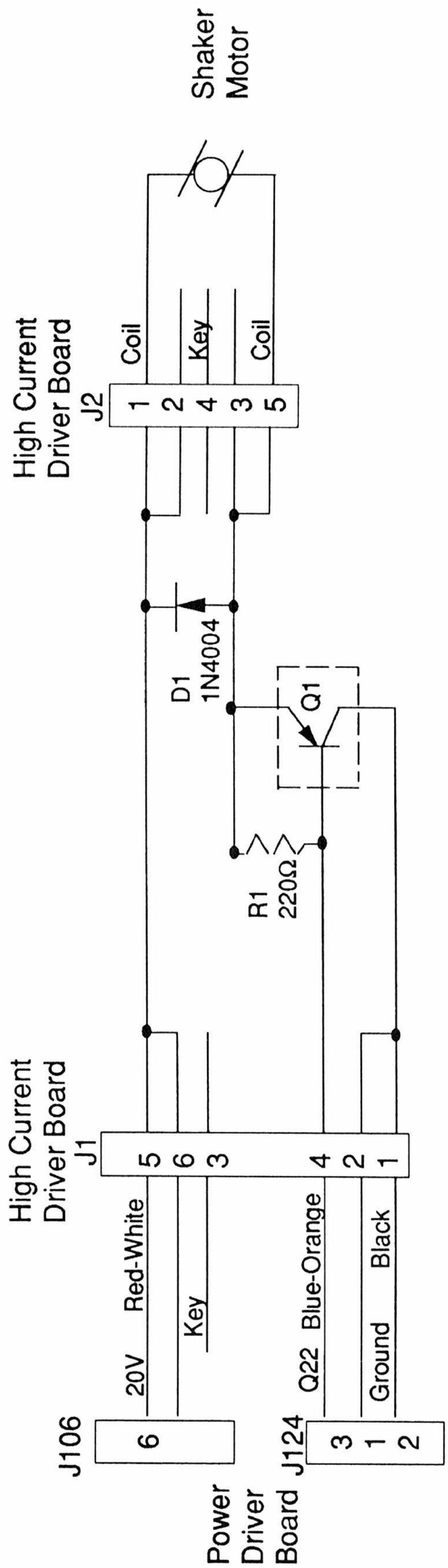

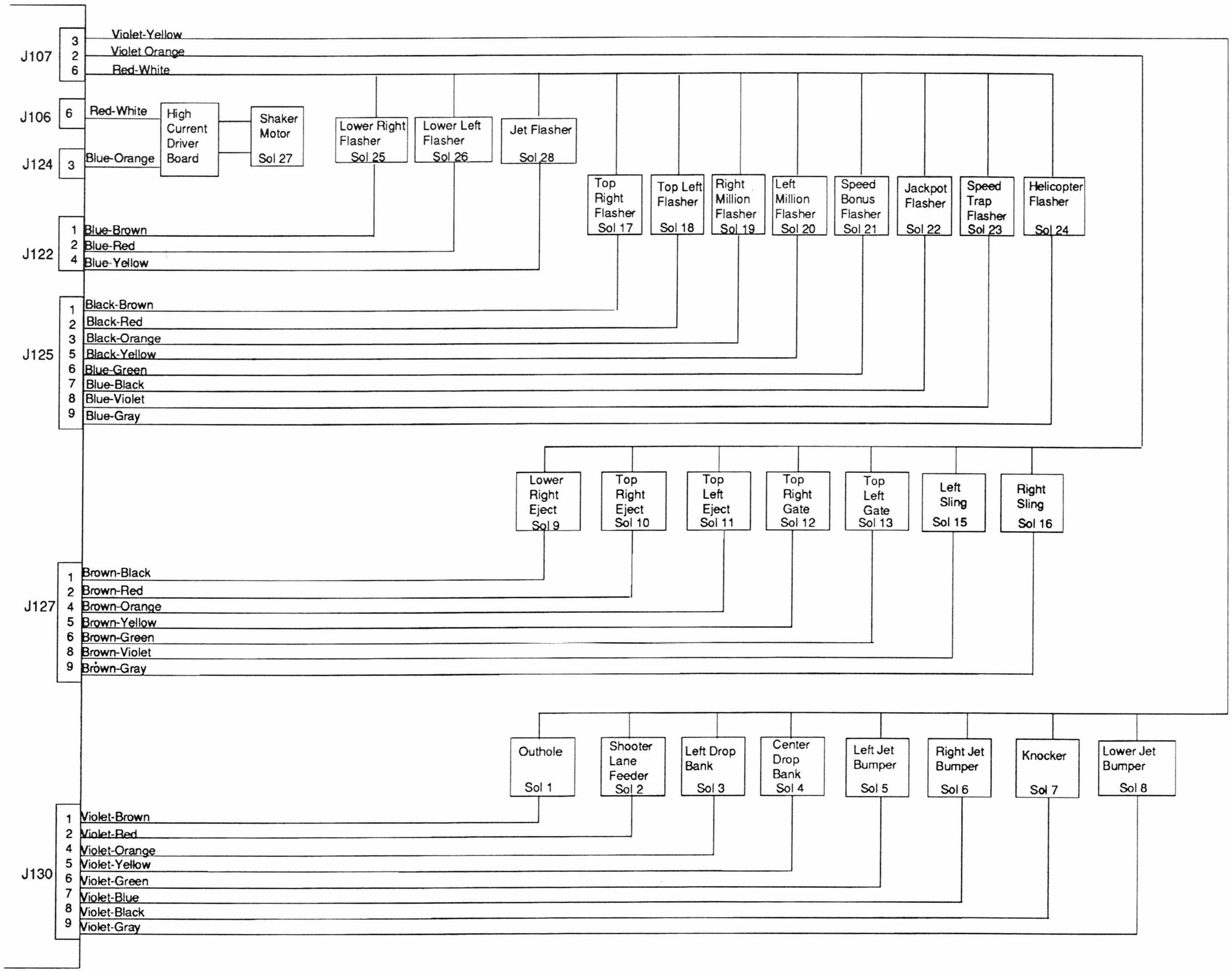

Power Driver Board

Solenoid Wiring

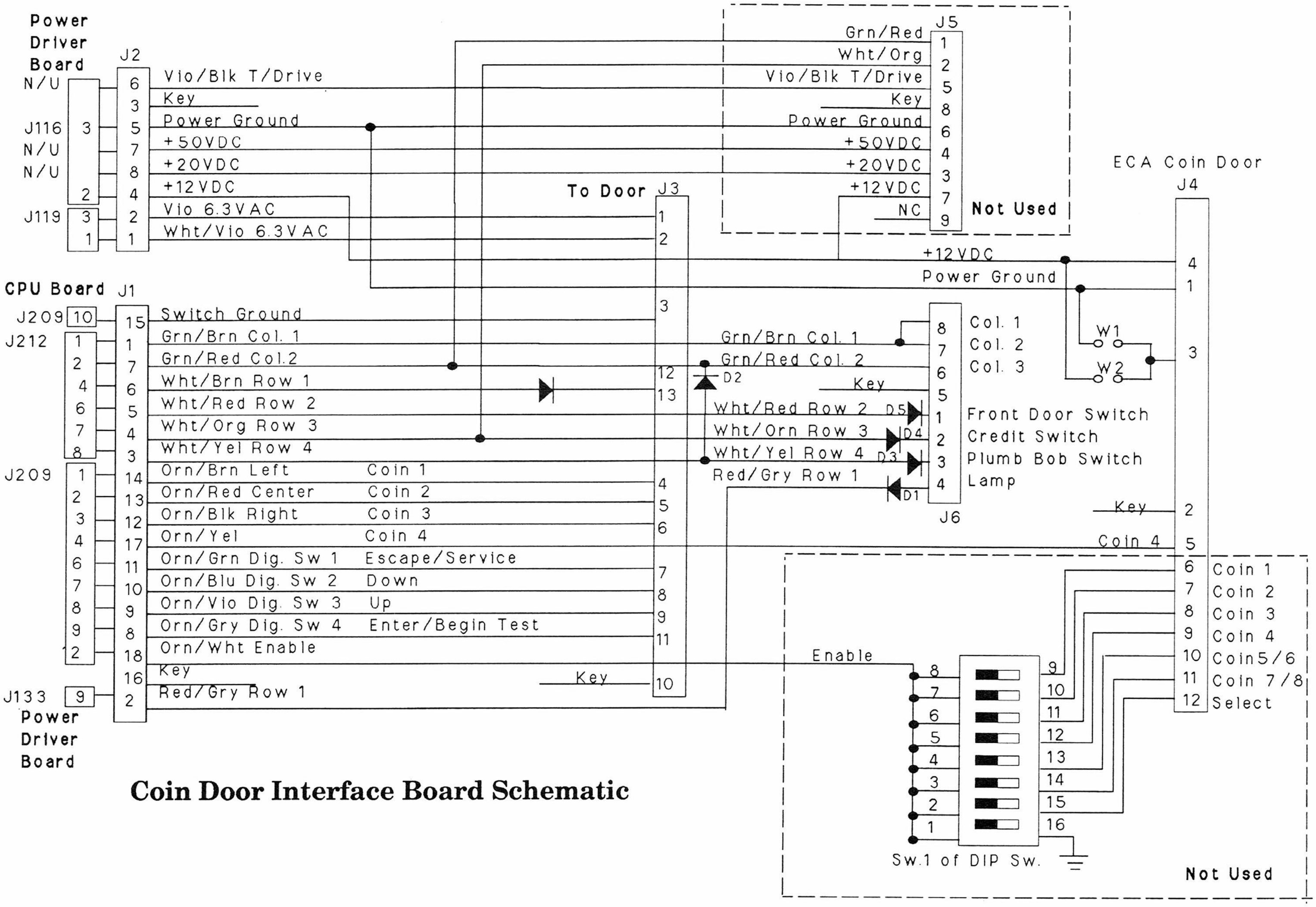

Coin Door Interface Board Schematic

Jumper Chart

	W14	W15	W16	W17	W18
American	In	In	In	In	In
European	In	In	Out	In	In
French	In	In	In	Out	In
German	In	In	In	In	Out

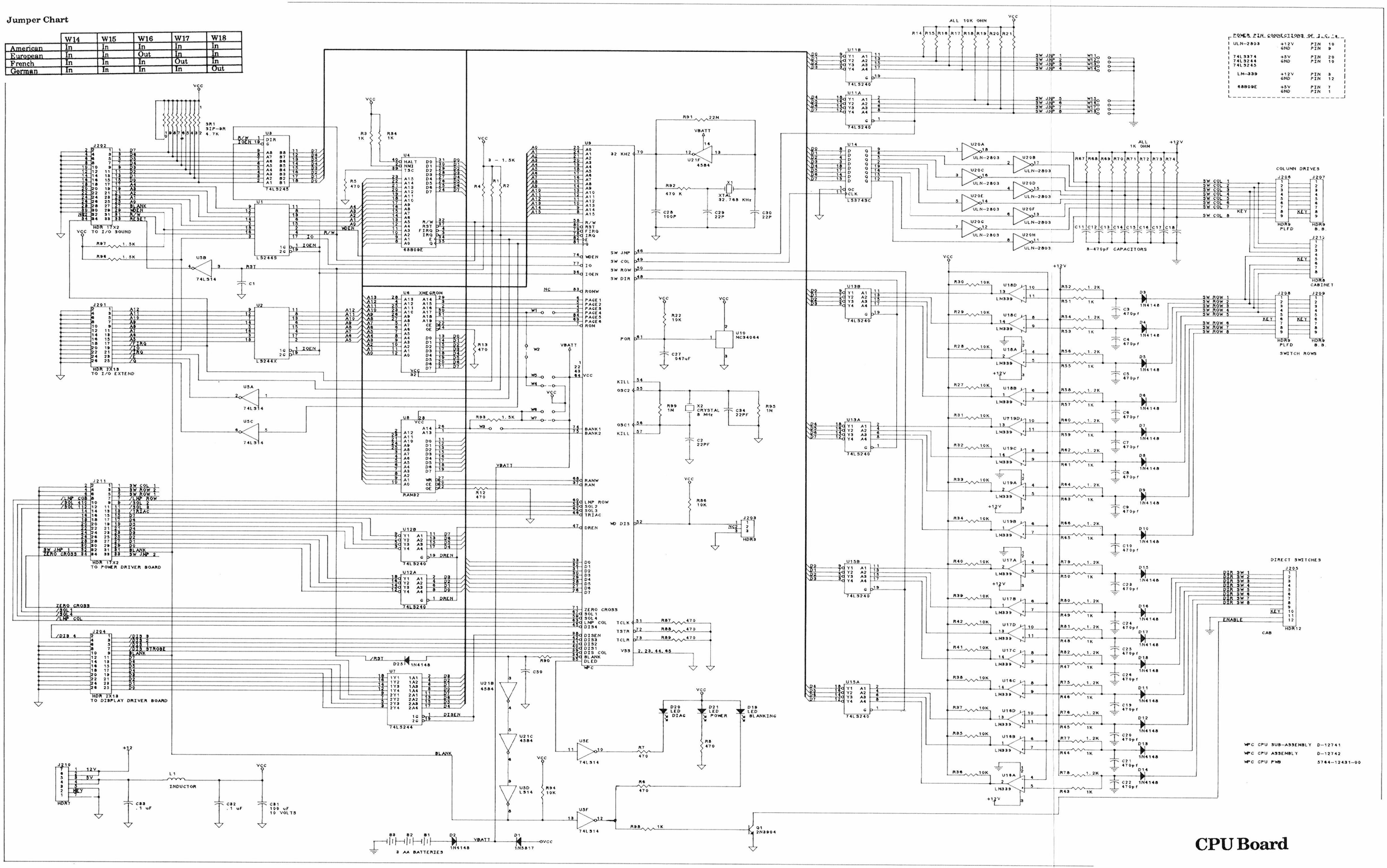

CPU Board

REV	DESCRIPTION OF CHANGE	ECN NO. DATE
	NPR 5-31-90	24242

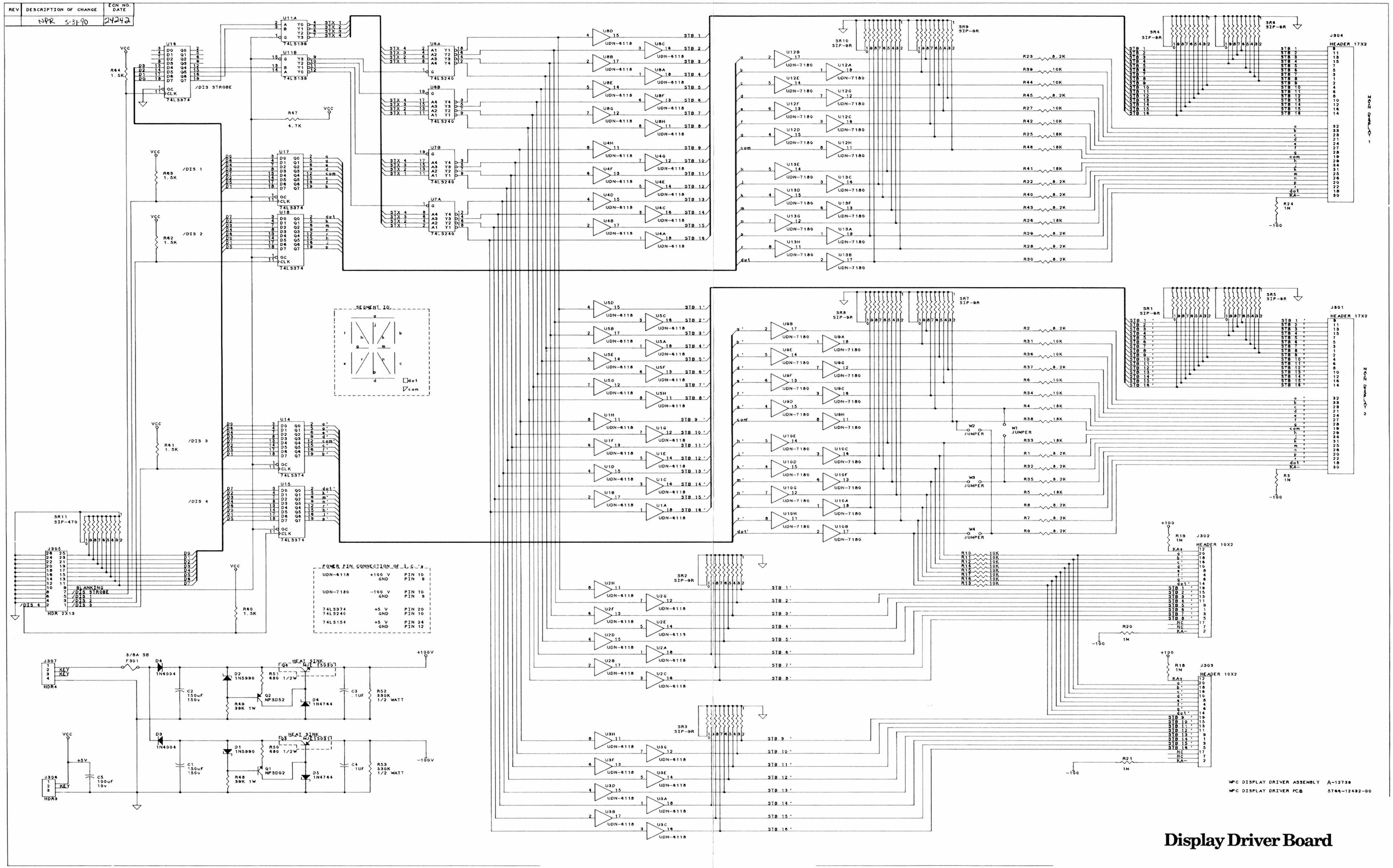

Display Driver Board

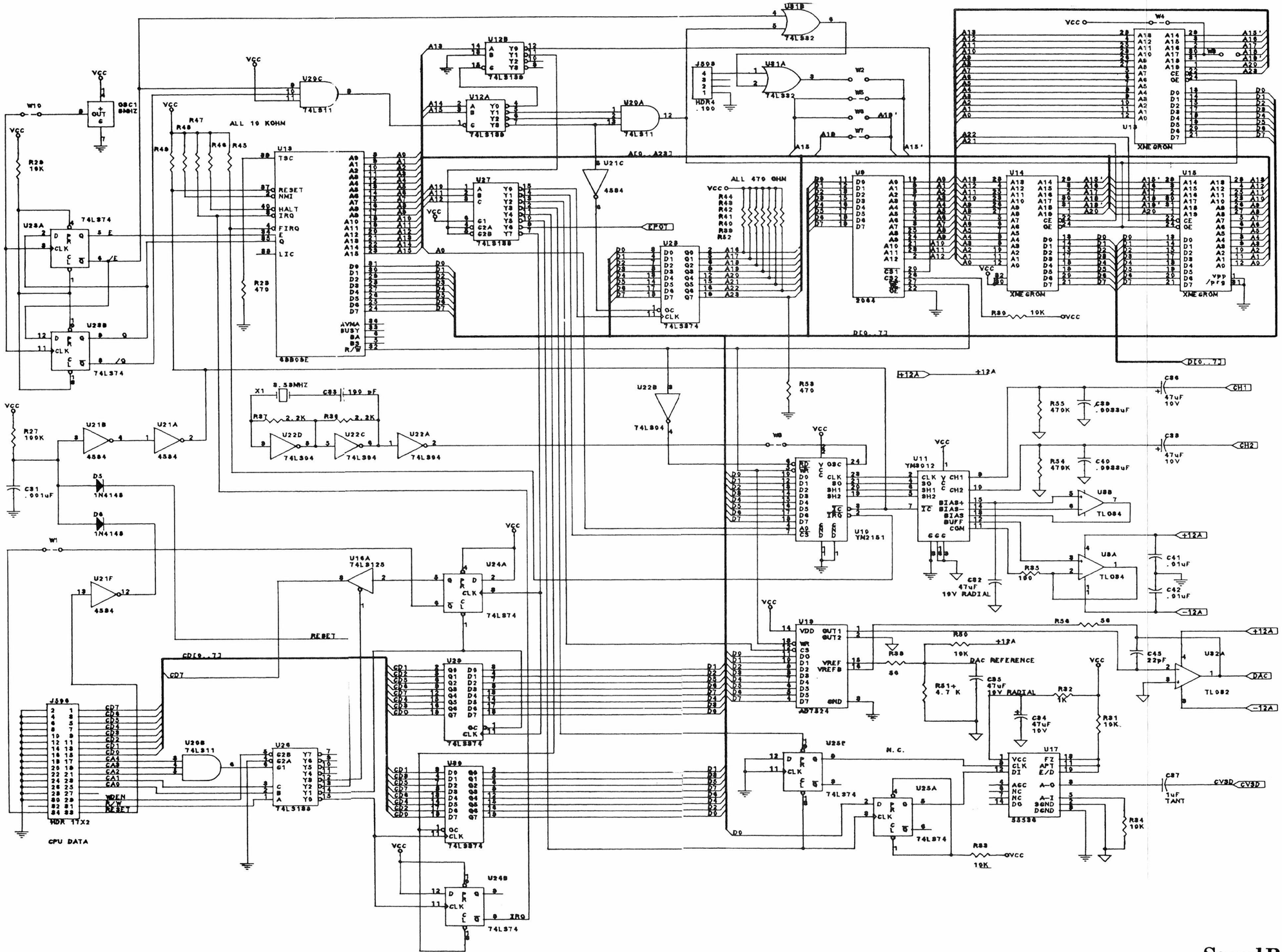

Sound Board Sheet 1

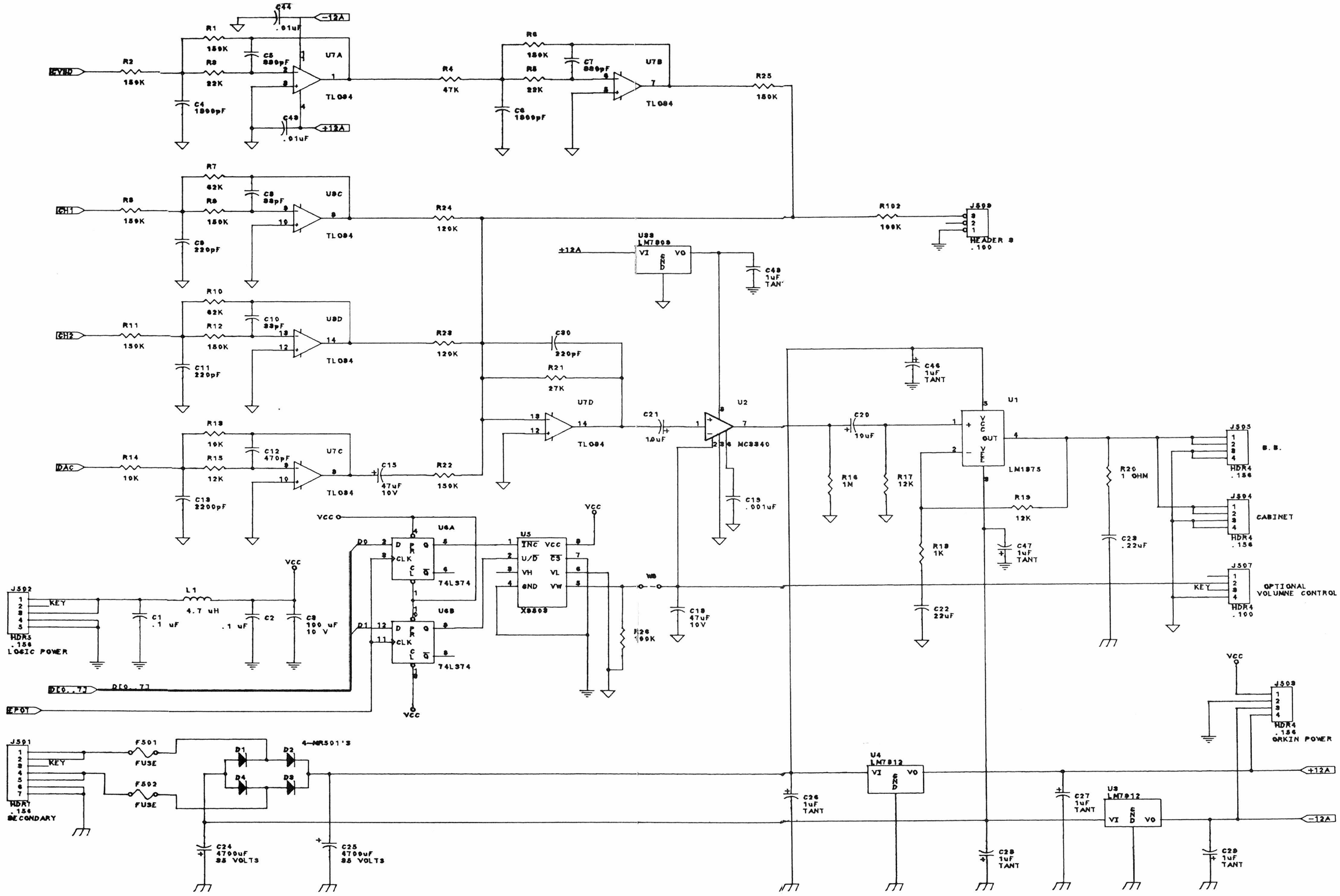

Sound Board Sheet 2

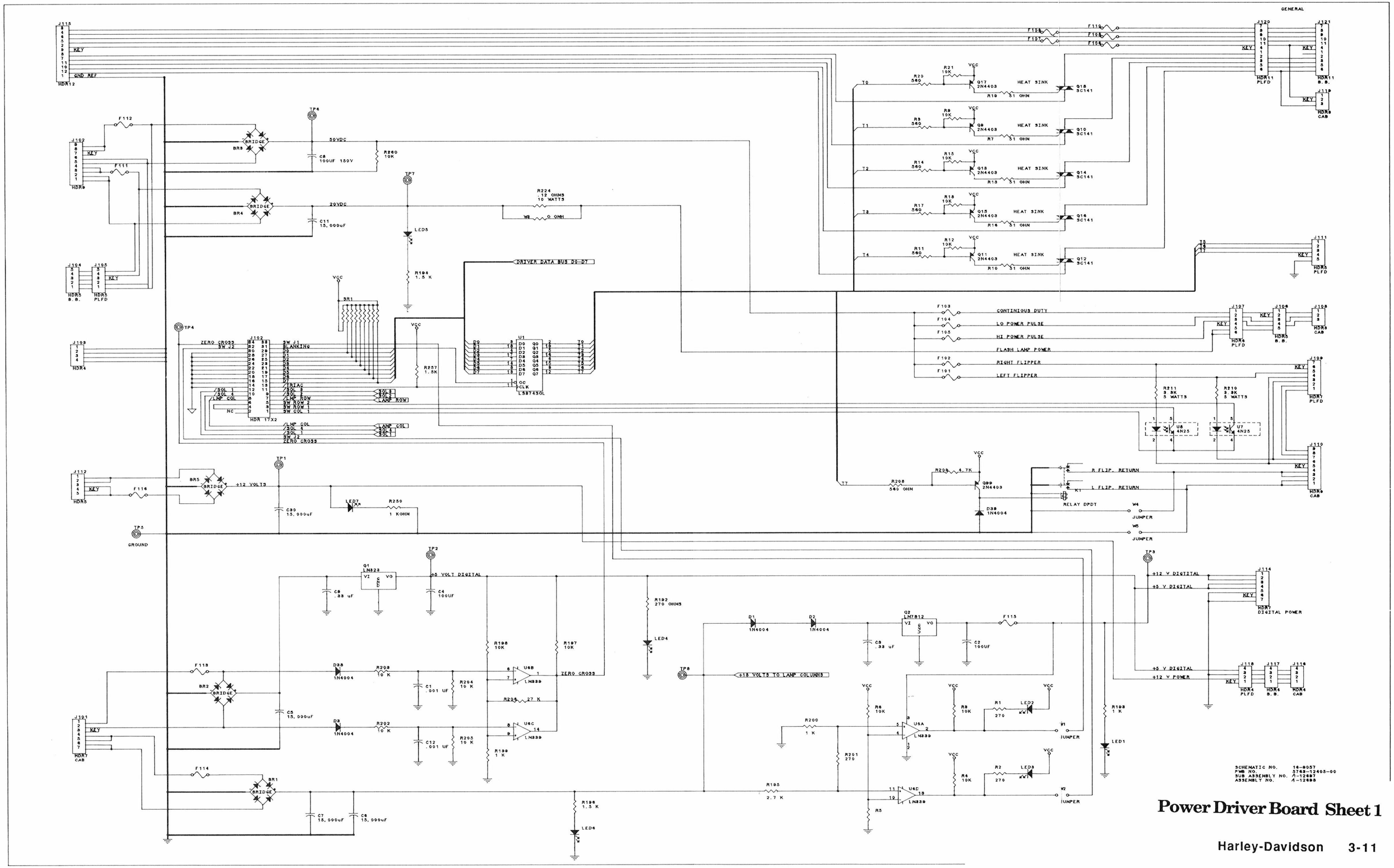

Power Driver Board Sheet 1

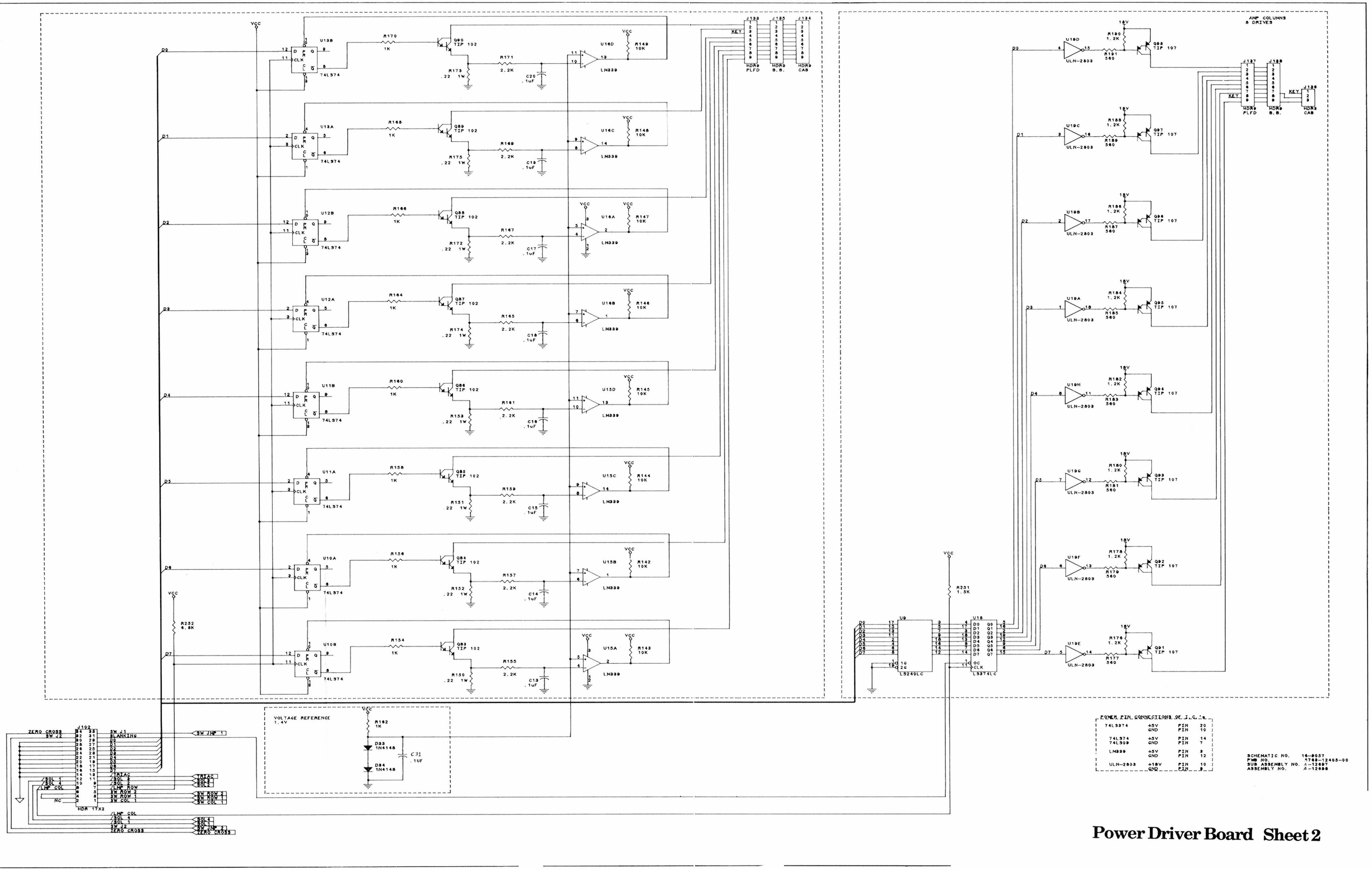

Power Driver Board Sheet 2

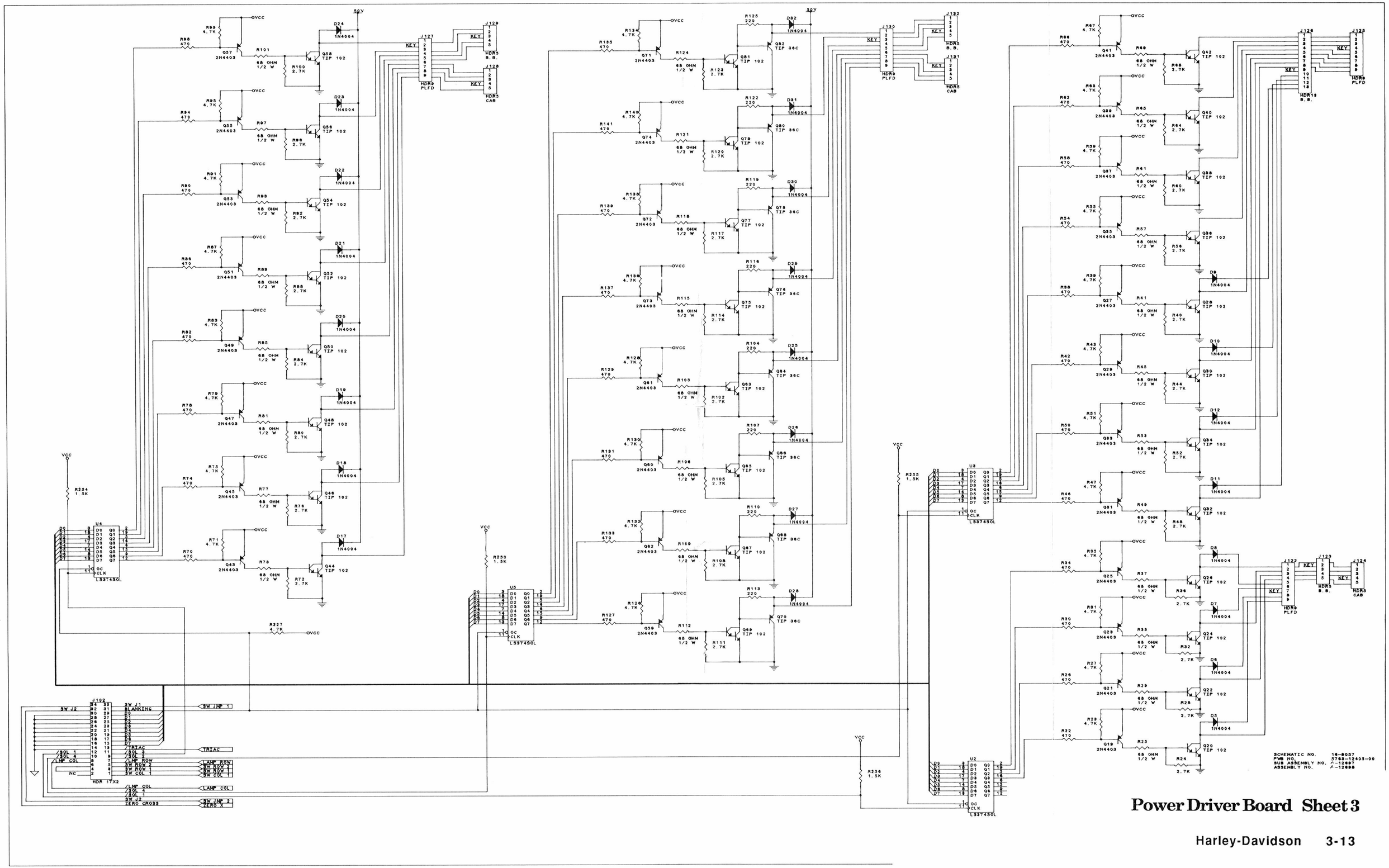

Power Driver Board Sheet 3

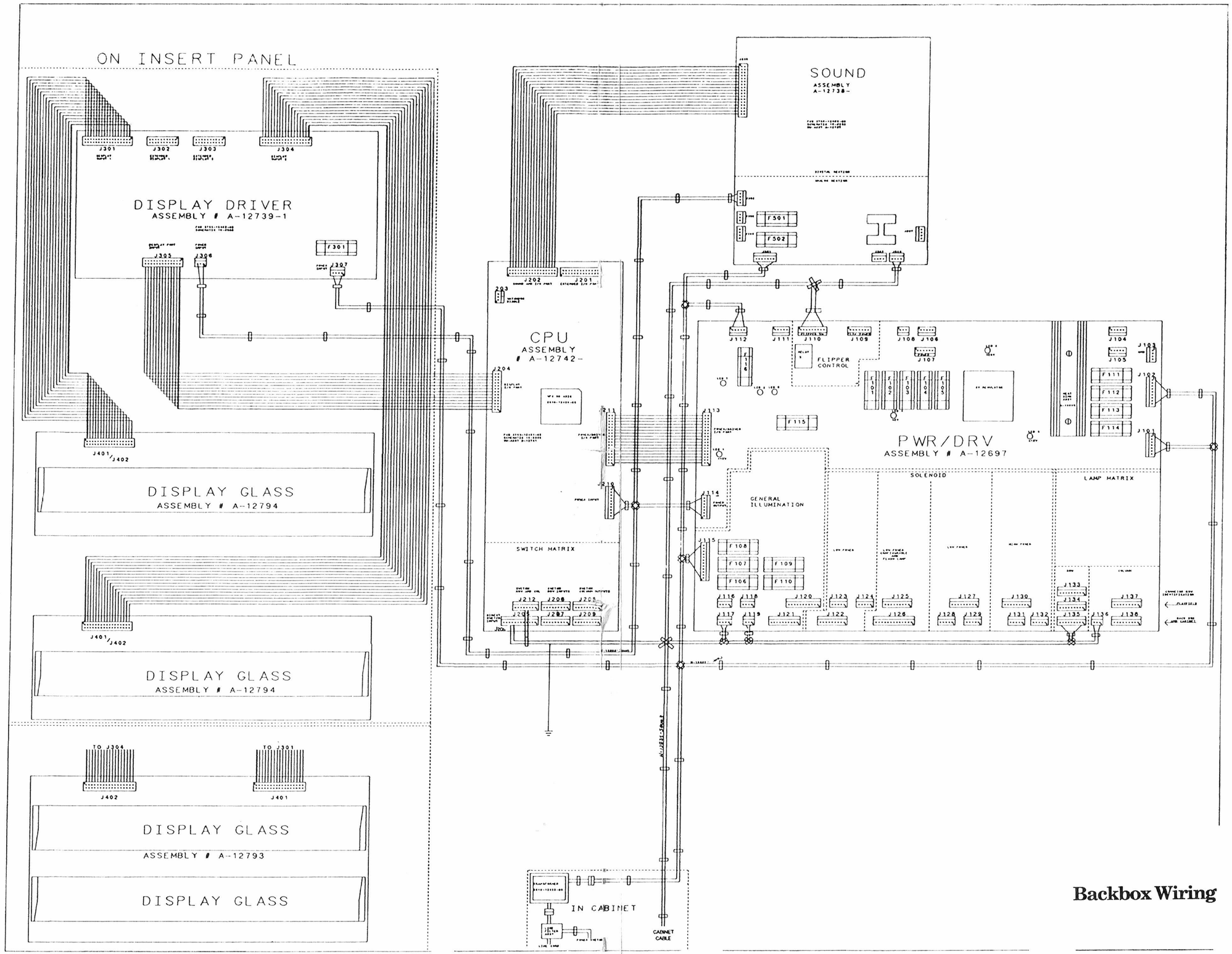

Backbox Wiring

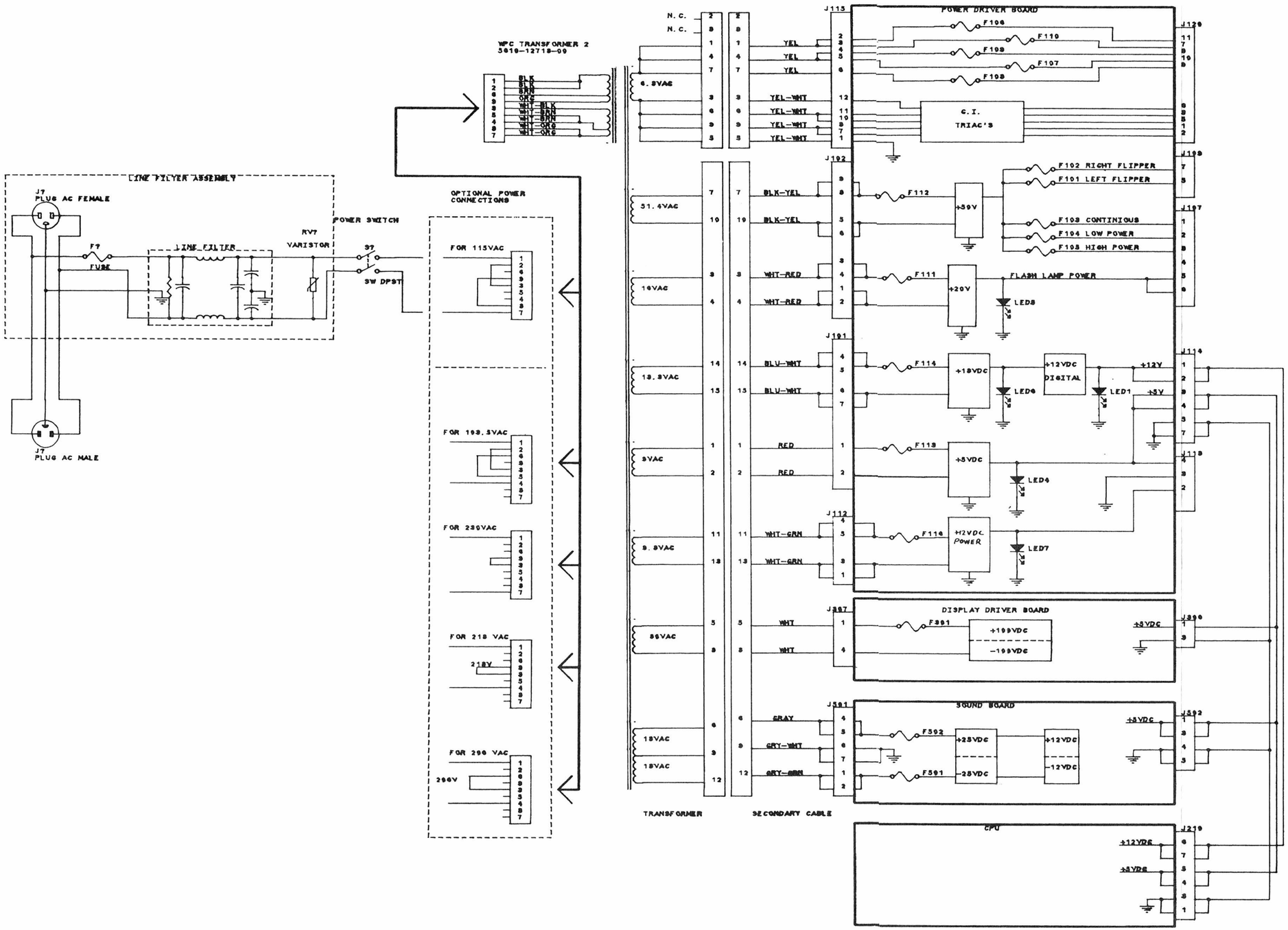

Power Wiring

Switch Circuits

Wire Color	Function		Connector from CPU To Playfield	To Cabinet	Transistor
Green/Brown	Column 1		J206-1	J212-1	U20-18
Green/Red	Column 2		J206-2	J212-2	U20-17
Green/Orange	Column 3		J206-3		U20-16
Green/Yellow	Column 4		J206-4		U20-15
Green/Black	Column 5		J206-5		U20-14
Green/Blue	Column 6		J206-6		U20-13
Green/Violet	Column 7		J206-7		U20-12
Not Used	Column 7				U20-11
White/Brown	Row 1		J208-1	J212-4	U18-11
White/Red	Row 2		J208-2	J212-6	U18-9
White/Orange	Row 3		J208-3	J212-7	U18-5
White/Yellow	Row 4		J208-4	J212-8	U18-7
White/Green	Row 5		J208-5		U19-11
White/Blue	Row 6		J208-7		U19-9
White/Violet	Row 7		J208 -8		U19-5
White/Gray	Row 8		J208-9		U19-7
Orange/ Brown	Direct 1	Left Coin		J205-1	U17-5
Orange/Red	Direct 2	Center Coin		J205-2	U17-7
Orange/Black	Direct 3	Right Coin		J205-3	U17-11
Orange/Yellow	Direct 4	4th Coin		J205-4	U17-9
Orange/Green	Direct 5	Escape/Service		J205-6	U16-9
Orange/Blue	Direct 6	Down/Vol Down		J205-7	U16-11
Orange/Violet	Direct 7	Up/ Vol Up		J205-8	U16-7
Orange/Gray	Direct 8	Enter/Test		J205-9	U16-5
Black		Ground		J205-10	
Orange/White		Enable		J205-12	

Lamp Circuits

Wire Color	Function	Connectors from Power Driver Board To Playfield	To Cabinet	Transistor
Yellow/Brown	Column 1	J138-1		Q98
Yellow/Red	Column 2	J138-2		Q97
Yellow/Orange	Column 3	J138-3		Q96
Yellow/Black	Column 4	J138-4		Q95
Yellow/Green	Column 5	J138-5		Q94
Yellow/Blue	Column 6	J138-6		Q93
Yellow/Violet	Column 7	J138-7		Q92
Yellow/Gray	Column 8	J138-9		Q91
Red/Brown	Row 1	J133-1		Q90
Red/Black	Row 2	J133-2		Q89
Red/Orange	Row 3	J133-4	J133-4	Q88
Red/Yellow	Row 4	J133-5	J133-5	Q87
Red/Green	Row 5	J133-6	J133-6	Q86
Red/Blue	Row 6	J133-7	J133-7	Q85
Red/Violet	Row 7	J133-8	J133-8	Q84
Red/Gray	Row 8	J133-9	J133-9	Q83

Solenoid Circuits

Wire Color	Function		Connectors from Power Driver Board To Playfield	Transistor
Violet/Brown	Solenoid 1, High Power		J130-1	Q82
Violet/Red	Solenoid 2, High Power		J130-2	Q80
Violet/Orange	Solenoid 3, High Power		J130-4	Q78
Violet/Yellow	Solenoid 4, High Power		J130-5	Q76
Violet/Green	Solenoid 5, High Power		J130-6	Q64
Violet/Blue	Solenoid 6, High Power		J130-7	Q66
Violet/Black	Solenoid 7, High Power		J130-8	Q68
Violet/Gray	Solenoid 8, High Power		J130-9	Q70
Brown/Black	Solenoid 9, Low Power		J127-1	Q58
Brown/Red	Solenoid 10, Low Power		J127-2	Q56
Brown/Orange	Solenoid 11, Low Power		J127-4	Q54
Brown/Yellow	Solenoid 12, Low Power		J127-5	Q52
Brown/Green	Solenoid 13, Low Power		J127-6	Q50
Not Used	Solenoid 14, Low Power			Q48
Brown/Violet	Solenoid 15, Low Power		J127-8	Q46
Brown/Gray	Solenoid 16, Low Power		J127-9	Q44
Black/Brown	Flasher 1	No Diode	J125-1	Q42
Black/Red	Flasher 2	No Diode	J125-2	Q40
Black/Orange	Flasher 3	No Diode	J125-3	Q38
Black/Yellow	Flasher 4	No Diode	J125-5	Q36
Blue/Green	Special 1 Drive		J125-6	Q28
Blue/Black	Special 2 Drive		J125-7	Q30
Blue/Violet	Special 3 Drive		J125-8	Q34
Blue/Gray	Special 4 Drive		J125-9	Q32
Blue/Brown	Special 5 Drive		J122-1 J123-1	Q26
Blue/Red	Special 6 Drive		J122-2 J123-3	Q24
Blue/Orange	Special 7 Drive		J124-3	Q22
Blue/Yellow	Special 8 Drive		J122-4 J123-5	Q20

General Illumination Circuits

Wire Color	Function	Connectors from Power Driver Board To Playfield	To Cabinet	To Insert	Transistor
Green	Feed 1	J120-2			Q12
Violet	Feed 2	J120-6		J121-6	Q10
Brown	Feed 3	J120-1			Q18
Yellow	Feed 4			J121-3	Q14
Orange	Feed 5	J120-2		J121-2	Q16
White/Green	Return 1	J120-10			F7
White/Violet	Return 2	J120-11		J121-11	F6
White/Brown	Return 3	J120-7			F10
White/Yellow	Return 4			J121-9	F8
White/Orange	Return 5	J120-8			F9

Flipper Circuits

Wire Color	Function	Connectors from Power Driver Board To Playfield
Gray/Yellow	Left Flipper Power	J109-5
Blue/Yellow	Right Flipper Power	J109-7
Not Used	Upper Left Flipper	
Blue/Gray	Lower Left Flipper	J109-3
Not Used	Upper Right Flipper	
Blue/Violet	Lower Right Flipper	J109-4
Not Used	Upper Left Flipper	J110-9
Blue/Gray	Lower Left Flipper	J110-7
Black/Yellow		J110-8
Blue/Violet	Lower Right Flipper	J110-6
Orange/Gray	Left Flipper Ground	J110-2, 1
Orange/ Violet	Right Flipper Ground	J110-4, 3

Power Circuits

Wire Color	Function	Connectors from Power Driver Board To Playfield	To Cabinet	To Insert
Gray	Digital +5V			
Gray/Green	Switch +12V			
Gray/Yellow	Analog +12V	J117-2	J116-2	
Black	Ground	J117-3	J116-3	

Power Circuits

Wire Color	Function	Connectors from Power Driver Board To Playfield	To Insert
Violet/Yellow	High Power 50V	J107-3	
Violet/Orange	Low Power 50V	J107-2	
Not Used	Other 50V	J107-1	
Not Used	Flasher 20V	J107-5	
Red/White	Flasher 20V	J107-6, J106-6	
White/Blue	50VAC		
White/Blue	50VAC		
Black	Ground	J103-1, 2	

Logic Circuits

Wire Color	Function	
Ribbon Cable	Data	J201 Connector to /from Extended Board (optional)
Ribbon Cable	Data	J202 Connector to /from Sound Board
Ribbon Cable	Data	J204 Connector to/from Display Driver
		Connectors from Power Driver Board
Black	Ground	J210-1
Black	Ground	J210-3
Gray	+5VDC	J210-4
Gray	+5VDC	J210-5
Gray/Green	+12VDC	J210-6
Gray/Green	+12VDC	J210-7
Ribbon Cable	Data	J211

Display Circuits

Wire Color	Function	
Ribbon Cable	Data	J301 Connector to/from Right Display Board
Ribbon Cable	Data	J304 Connector to/from Left Display Board
Ribbon Cable	Data	J305 Connector to/from CPU
		Connector from CPU/Power Driver Board
Gray	+5VDC	J306-1
Black	Ground	J306-3
		Connector from Transformer
White	100VAC	J307-1
White	100VAC	J307-4

Sound Circuits

Wire Color	Function	
		Connector From Transformer Secondary
Gray/Green	+12VDC	J501-1
Gray/Green	+12VDC	J501-2
Gray	+5VDC	J501-4
Gray	+5VDC	J501-5
Gray/White	-12VDC	J501-6
Gray/White	-12VDC	J501-7
		Power from CPU/Power Driver Board
Gray	+5VDC	J502-1
Gray	+5VDC	J502-3
Black	Ground	J502-4
Black	Ground	J502-5
		Cabinet Speaker Connections
Gray/Yellow	Speaker	J504-2
		Backbox Speaker Connections
Gray?Yellow	Speaker	J505-3
		Connector to/from CPU Board
Ribbon Cable	Data	J506

Lamp Matrix

Yellow (B+) — Red

Row \ Column	1 Yellow-Brown	2 Yellow-Red	3 Yellow-Orange	4 Yellow-Black	5 Yellow-Green	6 Yellow-Blue	7 Yellow-Violet	8 Yellow-Gray
1 Red-Brown	Los Angeles 11	Lamp 21 Back Panel 21	1st D in Davidson 31	B in Bike 41	2x Bonus 51	Right Eject Lock 61	Harley Value 50K 71	Left Million 81
2 Red-Black	Salt Lake City 12	Lamp 22 Back Panel 22	A in Davidson 32	I in Bike 42	3x Bonus 52	Right Eject Speed Bonus 62	Harley Value 100K 72	Right Million 82
3 Red-Orange	Sturgis 13	H in Harley 23	V in Davidson 33	K in Bike 43	4x Bonus 53	Right Eject Ex. Ball 63	Harley Value 200K 73	Lamp 83 Back Panel 83
4 Red-Yellow	Milwaukee 14	A in Harley 24	I in Davidson 34	E in Bike 44	5x Bonus 54	Right Eject Jackpot 64	Harley Value 300K 74	Lamp 84 Back Panel 84
5 Red-Green	Chicago 15	R in Harley 25	2nd D in Davidson 35	Left Eject 25K 45	6x Bonus 55	Left Spinner 3K 65	Harley Value 500K 75	Laconia 85
6 Red-Blue	Talladega 16	L in Harley 26	S in Davidson 36	Left Eject 50K 46	U Top Lane 56	Left Advance City 66	Left Drain Extra 76	Daytona 86
7 Red-Violet	Lamp 17 Back Panel 17	E in Harley 27	O in Davidson 37	Left Eject 100K 47	S Top Lane 57	Right Spinner 3K 67	Right Drain Extra 77	York 87
8 Red-Gray	Lamp 18 Back Panel 18	Y in Harley 28	N in Davidson 38	Left Eject 150K 48	A Top Lane 58	Right Advance City 68	Ride Again 78	New York 88

Switch Matrix

White — Green

Dedicated Grounded Switches	Row \ Column	1 Green-Brown	2 Green-Red	3 Green-Orange	4 Green-Yellow	5 Green-Black	6 Green-Blue	7 Green-Violet	8 Green-Gray
Orange-Brown **Left Coin Chute** D1	1 White-Brown	**Right Flipper** 11	**Slam Tilt** 21	B in Bike 31	U Top Lane 41	H in Harley 51	V in Davidson 61	Left Loop 71	Not Used 81
Orange-Red **Center Coin Chute** D2	2 White-Red	**Left Flipper** 12	**Front Door** 22	I in Bike 32	S Top Lane 42	A in Harley 52	I in Davidson 62	Right Loop 72	Not Used 82
Orange-Black **Right Coin Chute** D3	3 White-Orange	**Start Button** 13	**Token Dispenser** 23	K in Bike 33	A Top Lane 43	R in Harley 53	2nd D in Davidson 63	Left Drain 73	Not Used 83
Orange-Yellow **4th Coin Chute** D4	4 White-Yellow	**Plumb Bob Tilt** 14	**Not Used** 24	E in Bike 34	Not Used 44	L in Harley 54	S in Davidson 64	Right Drain 74	Not Used 84
Orange-Green Normal Function: **Service Credits** / Test Function: **Escape** D5	5 White-Green	Outhole 15	Left Jet Bumper 25	Top Right Eject 35	Not Used 45	E in Harley 55	O in Davidson 65	Shooter Lane 75	Not Used 85
Orange-Blue Normal Function: **Volume Down** / Test Function: **Down** D6	6 White-Blue	Trough 1 16	Right Jet Bumper 26	Top Left Eject 36	Not Used 46	Y in Harley 56	N in Davidson 66	Not Used 76	Not Used 86
Orange-Violet Normal Function: **Volume Up** / Test Function: **Up** D7	7 White-Violet	Trough 2 17	Lower Jet Bumper 27	Left Sling 37	Not Used 47	1st D in Davidson 57	Right Spinner 67	Not Used 77	Not Used 87
Orange-Gray Normal Function: **Begin Test** / Test Function: **Enter** D8	8 White-Gray	Trough 3 18	Lower Right Eject 28	Right Sling 38	Not Used 48	A in Davidson 58	Left Spinner 68	Not Used 78	Not Used 88